Video cassette recorder/4"LCD CTV PVR200

Service
Service
Service

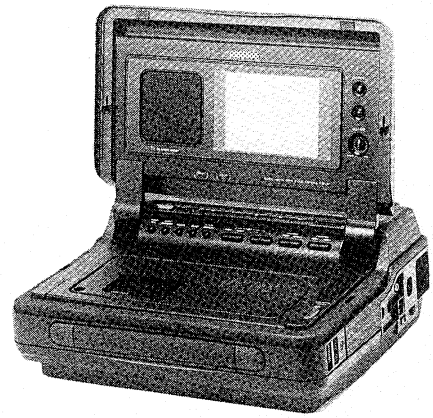

For the adjustment procedures of the tape deck mechanism reference is made to the Service Manual 4822 726 14818.

Service Manual

VHS
PAL

PVR200 is a video cassette recorder with a 4 inch LCD TV and electronic timer, suitable for recording and playing back TV- signals which meet the CCIR-PAL-BG/I, SECAM-BG/L/L' standard.
The signals are recorded on tape according to the VHS-standard.
The recorder is operated in the Standard Play (SP) mode.
The video cassette recorder has been provided with "on screen display" (OSD).

CONTENTS **CHAPTER**

Specifications, Replacements, Adjustments. 1
Block diagrams, Circuit diagrams, Drawings of P.C.B.'s. 2
Exploded views, Parts list. 3

Safety regulations require that the set be restored to its original condition and that parts which are identical with those specified be used.

Published by Consumer Electronics Printed in The Netherlands

©Copyright reserved Subject to modification

(NL) 4822 726 14858

CS 38 169

TABLE OF CONTENTS

CHAPTER 1

1. SPECIFICATION 1-1
2. DESCRIPTION OF CONTROLS 1-2
3. SERVICE MODE 1-4
4. SERVICING OF SMALL CHIP PARTS 1-5
   1. General cautions on handling and storage 1-5
   2. Removal of a chip 1-5
   3. Attachment of a chip 1-5
5. DISASSEMBLY OF CABINET PARTS AND REPLACEMENT 1-6
   1. Rear cover removal (Antenna cover) 1-6
   2. Cassette cover removal 1-6
   3. Top case removal 1-6
   4. Bottom plate removal 1-6
   5. P.C. boards removal 1-6
   6. Chassis removal 1-6
   7. LCD monitor unit and operational section removal 1-7
   8. Operation P.C. board removal 1-7
   9. LCD monitor unit removal 1-7
   10. LCD monitor P.C. board removal 1-7
   11. LCD board and FL tube removal 1-7
   12. Replacement of DD cylinder unit 1-8
   13. Replacement of upper cylinder unit 1-8
6. MECHANICAL ADJUSTMENT PROCEDURES 1-9
   1. Confirmation of brake torque 1-9
   2. Back tension adjustment 1-10
   3. Confirmation of A/C head height 1-10
7. ELECTRICAL ADJUSTMENT PROCEDURES 1-11
   1. Test equipment 1-11
   2. Power supply section 1-11
   3. Servo section 1-11
   4. Normal audio section 1-11
   5. Video section (Luminance section) 1-12
   6. Timer tuning section 1-12
   7. System control section 1-13
   8. TV section 1-13
   9. LCD section (Chroma decoder section) 1-13
8. LOCATION OF TEST POINTS AND ADJUSTMENT POINTS 1-16

CHAPTER 2

OVERALL BLOCK DIAGRAM 1 2-1
OVERALL BLOCK DIAGRAM 2 2-2
VIDEO POWER SUPPLY BLOCK DIAGRAM 2-3
SERVO BLOCK DIAGRAM 2-4
SYSTEM CONTROL BLOCK DIAGRAM 2-5
PORT-EXPANDER BLOCK DIAGRAM 2-6
TIMER TUNER BLOCK DIAGRAM 2-7
RF/IF BLOCK DIAGRAM 2-8
CHROMA DECODER/SYNC BLOCK DIAGRAM 2-9
RF/IF/CHROMA POWER SUPPLY BLOCK DIAGRAM 2-10
BACK LIGHT/AMP/CONTROL BLOCK DIAGRAM 2-11
CHROMINANCE BLOCK DIAGRAM 2-12
LUMINANCE BLOCK DIAGRAM 2-13
NORMAL AUDIO BLOCK DIAGRAM 2-14
AUDIO/VIDEO SELECTOR BLOCK DIAGRAM 2-15
HEAD AMP BLOCK DIAGRAM 2-16
WIRING DIAGRAM 2-17
SERVO/DRIVE/SYSTEM CONTROL/VIDEO POWER SUPPLY P.C.B. DRAWING PD01 2-18
VIDEO POWER SUPPLY SCHEMATIC DIAGRAM 2-19
SERVO SCHEMATIC DIAGRAM (DE-1) 2-20
DRIVER SCHEMATIC DIAGRAM (DE-2) 2-21
SYSTEM CONTROL SCHEMATIC DIAGRAM (DE-3) 2-22
SYSTEM CONTROL SCHEMATIC DIAGRAM (DE-4) 2-23
IF/CHROMA DECODER/SYNC/TIMER/TUNING/RF, IF, CHROMA POWER SUPPLY P.C.B. DRAWING PL01 2-24
RF P.C.B. DRAWING PL02 2-24
TIMER TUNING SCHEMATIC DIAGRAM (TT-1) 2-25
TIMER TUNING SCHEMATIC DIAGRAM (TT-2) 2-26
RF/IF/SCHEMATIC DIAGRAM (LCD-1) 2-27
CHROMA DECODER/SYNC SCHEMATIC DIAGRAM (LCD-2) 2-28
RF/IF/CHROMA POWER SUPPLY SCHEMATIC DIAGRAM (LCD-3) 2-29
BACK LIGHT P.C.B. DRAWING PB01 2-30
CONTROL P.C.B. DRAWING PB02 2-30
AMP P.C.B. DRAWING PB03 2-30
BACK LIGHT/AMP/CONTROL SCHEMATIC DIAGRAM (LCD-4) 2-31
LUMINANCE/CHROMINANCE/AUDIO, VIDEO SELECTOR/AUDIO P.C.B. DRAWING PV01 2-32
CHROMINANCE SCHEMATIC DIAGRAM (VS-1) 2-33
LUMINANCE SCHEMATIC DIAGRAM (VS-2) 2-34
NORMAL AUDIO SCHEMATIC DIAGRAM (AD) 2-35
AUDIO/VIDEO SELECTOR SCHEMATIC DIAGRAM (IO) 2-36
HEAD AMP P.C.B. DRAWING PH01 2-37
HEAD AMP SCHEMATIC DIAGRAM (HA) 2-37
BATTERY P.C.B. DRAWING PA01 2-38
EJECT P.C.B. DRAWING PE01 2-38
ACCESSORY JACK P.C.B. DRAWING PJ01 2-38
RECEIVER P.C.B. DRAWING PR01 2-38
KEY SCHEMATIC DIAGRAM 2-38

CHAPTER 3

CABINET EXPLODED VIEW (TOP) 3-1
CABINET EXPLODED VIEW (BOTTOM) 3-2
TAPE DECK EXPLODED VIEW (TOP) 3-3
TAPE DECK EXPLODED VIEW (BOTTOM) 3-4
PARTS LIST 3-5

1. SPECIFICATIONS

MAIN UNIT

GENERAL

Supply voltage : 12 Volt DC
Power consumption : 12W

AC adapter/Battery charger : SBC3640
Mains voltage : 110 - 240V Auto select
Main frequency : 50/60 Hz
Output voltage : 12V DC
Output current : 1.2A
Charging time of a battery SBC3641 : 2 hours typical

Battery : SBC3641
Output voltage : 12V
Loading capacity : 2.5 Ah

VCR Section

Recording system : VHS, PAL and MESECAM
SECAM-OST
Tape speed : 23.39 mm/sec.
Recording time : Maximum 4 hours with E-240
Fast-forward/Rewind time : 12 minutes typical with E-240
Dimensions : 262(W) x 98(H) x 230(D) mm
Weight : Approx. 2.95 Kg
Operating temperature range : 5°C - 40°C
Relative humidity : 10% - 75%

TV Section

LCD panel : 4-inch square TFT active matrix LCD
Number of pixels : 234 x 479 (112,086)
Channels :

	VHF I	VHF III	UHF
PAL BG	2 - 4, 13 - 15 (E2 - E4, A - C)	5 - 12, 16 - 20 (E5 - E12, D - H)	21 - 69 (21 - 69)
PAL I	2 - 4 (IA - IC)	5 - 11 (ID - IK)	21 - 69 (21 - 69)
SECAM L - L'	2 - 4 (L2 - L4)	5 - 10 (L5 - L10)	21 - 69 (21 - 69)

Tuning system : Automatic PLL tuning
Speaker : 50 mm round speaker
Video input : 1.0 Vp-p, 75 ohm CINCH
Video output : 1.0 Vp-p, 75 ohm CINCH
Audio input : 200 mV, 47K ohm CINCH
Audio output : 500 mV, 600 ohm CINCH
External antenna socket : 3.5 mm (/54 only)
Headphones socket : 2 x 8 ohm minimum Mini Jack

Accessory connector

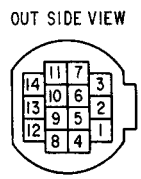

1) EXT. 12V 2) BATT 12V 3) GND
4) N.C. 5) AUDIO IN 6) CHARGE L
7) N.C. 8) Y-IN 9) GND
10) C-IN 11) VIDEO OUT 12) AUDIO OUT
13) GND 14) GND

Accessories supplied

AC adapter/Battery charger : SBC3640
Battery pack : SBC3641
Shoulder strap : 22AV 5263/00
Antenna adapter cable : 22AV 5262/00

Optional (recommended) accessories

Car adapter cable : SBC3642
Soft case : SBC3643
Carrying case : SBC3644
Headphone : SBC3171/SBC3174
In-Ear headphone : SBC3134

As part of our policy of continuous improvement, we reserve the right to alter design and spcifications without notice.

2. DESCRIPTION OF CONTROLS

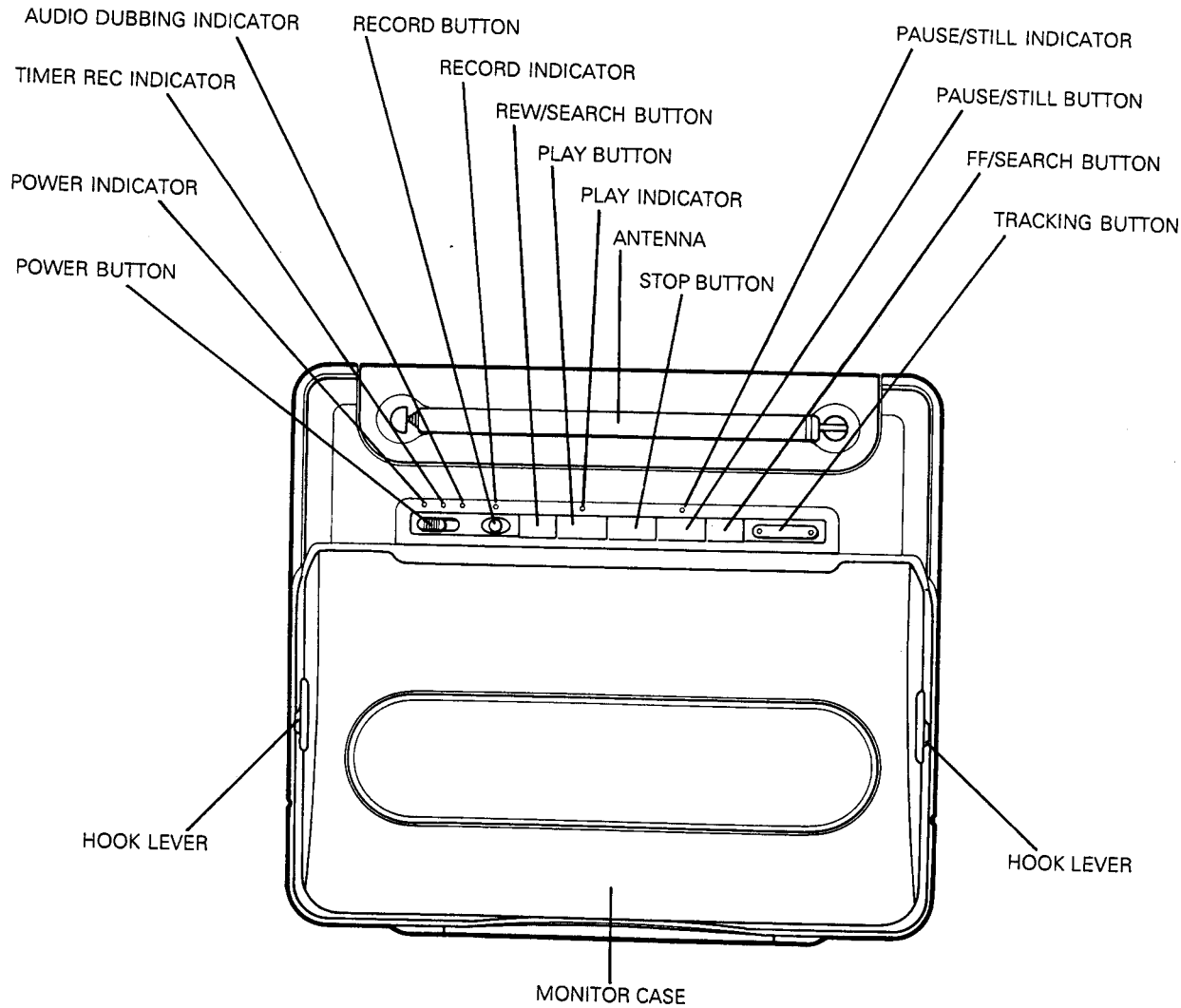

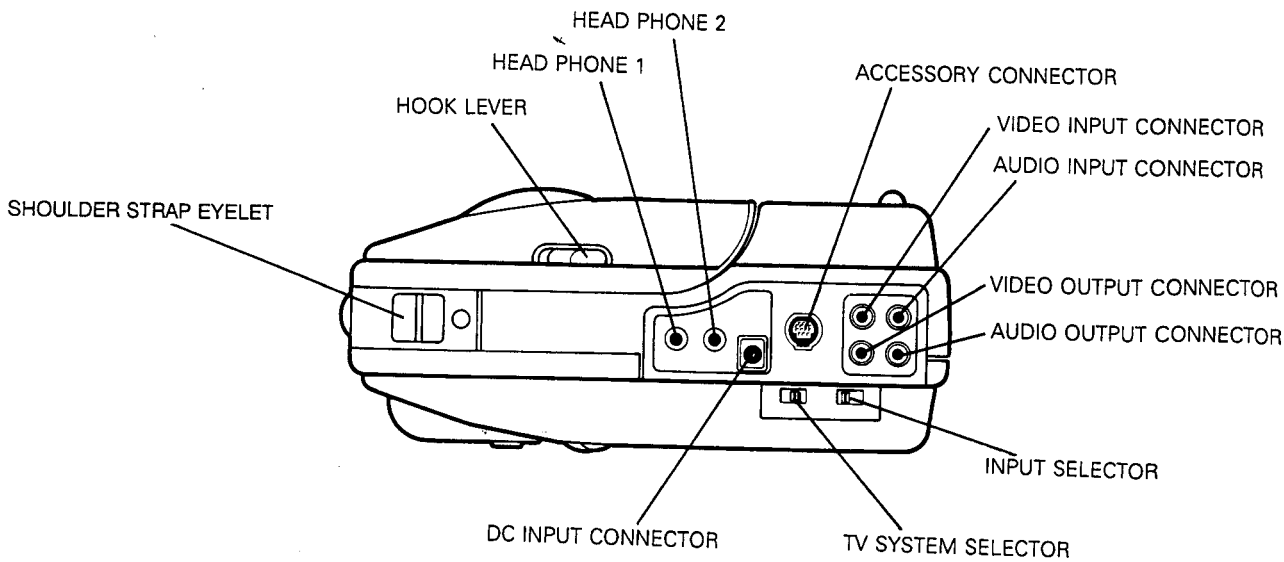

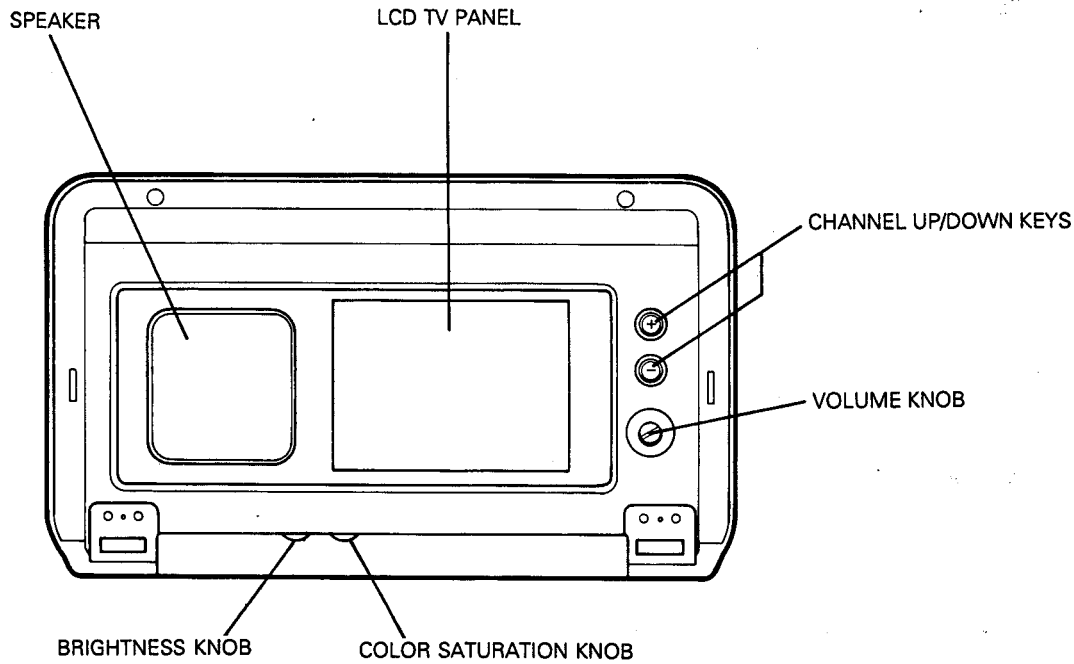
SPEAKER
LCD TV PANEL
CHANNEL UP/DOWN KEYS
VOLUME KNOB
BRIGHTNESS KNOB
COLOR SATURATION KNOB

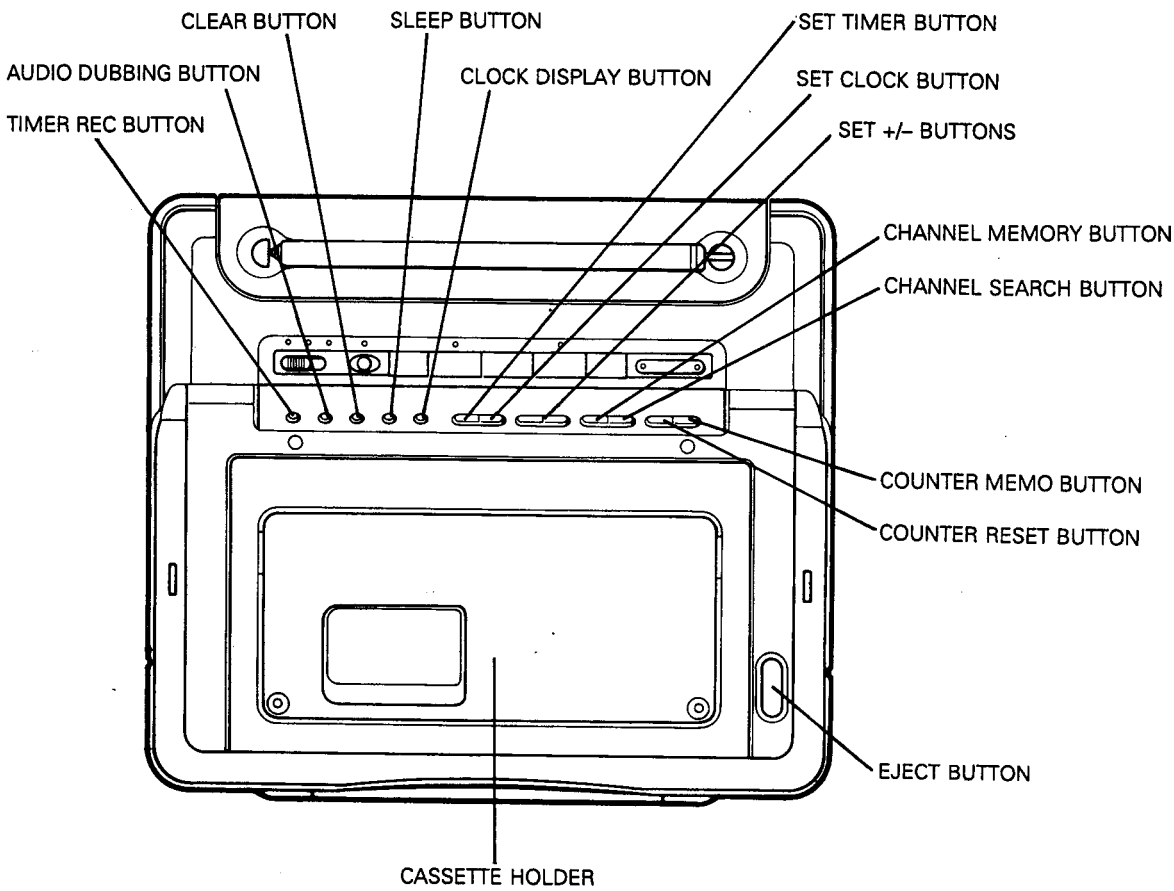
CLEAR BUTTON
SLEEP BUTTON
SET TIMER BUTTON
AUDIO DUBBING BUTTON
CLOCK DISPLAY BUTTON
SET CLOCK BUTTON
TIMER REC BUTTON
SET +/– BUTTONS
CHANNEL MEMORY BUTTON
CHANNEL SEARCH BUTTON
COUNTER MEMO BUTTON
COUNTER RESET BUTTON
EJECT BUTTON
CASSETTE HOLDER

WARNINGS

1. **ESD**

   Many ICs, SMD's and many other semi-conductors are susceptible to electrostatic discharges(ESD). Careless handling during repair can reduce life drastically.
   When repairing, make sure that you are connected with the same potential as the mass of the set via a wrist wrap with resistance. Keep components and tools on the same potential.

2. Never replace any parts while the set is switched on.

3. Use plastic instead of metal alignment tools.
   This is in order to prevent a short circuit or a specific circuit being rendered unstable.

4. Proceed with care when measuring the fluorescent lamp drive circuit.

5. Critical components having special safety characteristics are enclosed within a broken line (where several critical components are grouped in one area) along with the safety symbol ⚠ on the schematics or exploded views.

3. SERVICE MODE

Push the STOP and REW keys simultaneously with power of the unit turned OFF, and push the POWER key, and then the unit will be set to the service mode.
In the service mode, the special functions described below are allowable.
The other functions are the same for that in the normal mode.

1. Non-volatile memory initializing function
   In the service mode, push the CH MEMO key and CLEAR key, and the contents of non-volatile memory are all initialized.
   Then the display below will be appeared, which means that initialization is completed.

ROM INITIALIZED

2. Clock initializing function
   In the service mode, push the SET CLOCK key and CLEAR key, and the clock will be initialized.

CLOCK INITIALIZED

3. Version of μ-COM checking function
   If the unit is set to the service mode by pushing the two keys simultaneously, version of μ-COM will be displayed on the OSD.
   The display will be disappeared when any other key is pushed.

   [OSD display example]

MODEL PRV200 XXX

4. Auto REW & PLAY function
   In the service mode, push the PLAY key and the auto REW & PLAY function will be allowed. It plays until the last end, rewinds until the first end and plays at the first end.
   Briefly, if the first end is detected with the REW or SCAN etc. in the service mode, the tape will be always played.

5. Auto shut-off release function
   In the service, the auto shut-off function, which turns power of the unit OFF when the non-synchronizing condition (nothing on the screen) is kept for more than five minutes, is released.

6. Service mode release procedures
   In the service mode, turn power of the unit once and the service mode will be released.
   No other method can release the service mode.

4. SERVICING OF SMALL CHIP PARTS

4.1 General cautions on handling and storage

a. Oxidization on the chip's terminals results in poor soldering. Do not handle them with bare hands.
b. For storage, avoid the following places where oxidization will occur, and their capacitance and resistance will deteriorate.
   1. In areas with sulfur or chlorine gas.
   2. Directly sunlit places
   3. High temperature/high humidity places
c. Rough handling of circuit boards containing Surface Mounted Devices (SMD's) can cause damage to the components as well as the circuit boards. Circuit boards containing SMD's should never be bent or flexed. Different circuit board materials expand and contract at different rates when heated or cooled and the components and/or solder connections can be damaged by the stress. Never rub or scrape chip components as this may cause the value of the component to change. Similarly, do not slide the circuit board across any surface.

4.2 Removal of a chip

a. Heat the solder (for 2–3 seconds) at each terminal of the chip. You can remove small components with the soldering iron using a little force in horizontal direction while removing solder with braid. See Fig. 1A or:
b. Holding the chip with a pair of tweezers take it off gently using the soldering iron's heat applied on each terminal. See Fig. 1B.
c. The printed board has to be free from excess solder, so that it is ready for the mounting of new components. See Fig. 1C.

Caution on removal:

a. When handling the soldering iron, use suitable pressure and be careful.
b. When removing the chip, do not use undue force with the pair of tweezers.
c. The soldering iron in use should be 30W; it is best if provided with a thermal control (soldering temperature about 225 to 250°C).
d. The chip, once removed, should **never** be used again.

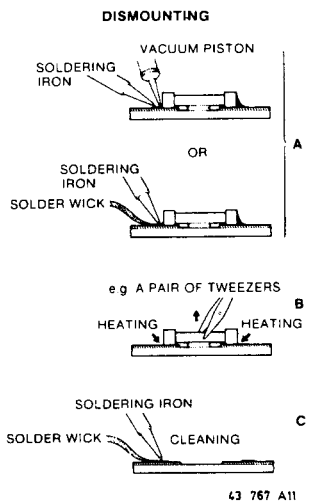

Fig. 1

4.3 Attachment of a chip

a. Temporarily solder one terminal of the chip on the copper foil surface. See Fig. 2A.
b. Holding one end of the chip with a pair of tweezers, completely solder both terminals, one after the other. See Fig. 2B.

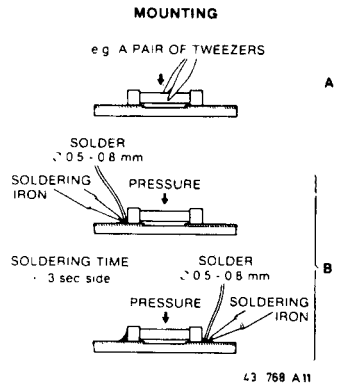

Fig. 2

Caution on attachment:

a. When soldering the chip terminals, do not touch them directly with the soldering iron. The soldering must be as quick as possible, being careful not to hurt the terminals and the body itself.
b. Keep the chip's body in contact with the printed board when soldering.
c. The soldering iron in use should be 30W; it is best if provided with a thermal control (soldering temperature about 225 to 250°C).
d. Soldering should not be done outside the specified area.
e. Soldering flux (of rosin) may be used but should not be acid.
f. After soldering, let the chip cool down gradually at room temperature.
g. The soldering amount should be proper: with an excessive amount the chip may be cracked and subject to other troubles (curvature of printed board, cramp of terminals, etc) See Fig. 3.

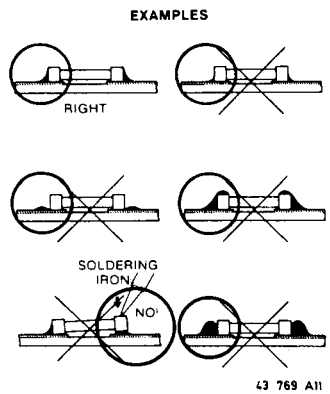

Fig. 3

5. DISASSEMBLY OF CABINET PARTS AND REPLACEMENT

5.1 Rear cover removal (Antenna cover)

1. Remove two screws.

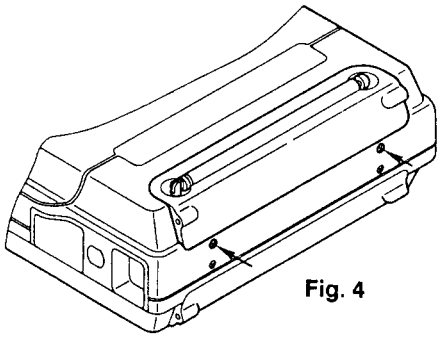

Fig. 4

5.2 Cassette cover removal

1. Remove two screws.

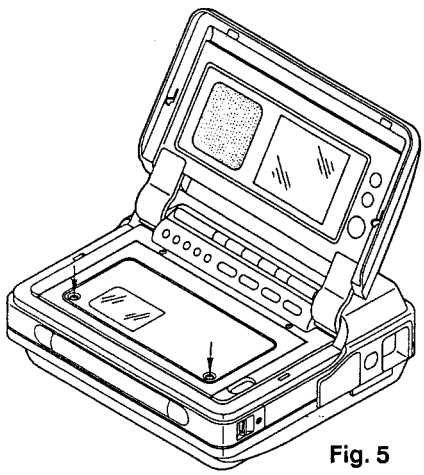

Fig. 5

5.3 Top case removal

1. Remove two screws from the top side, two screws from the rear side and two screws from the left and right side.

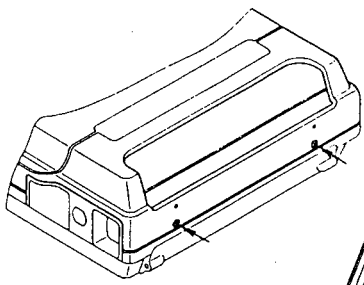

Fig. 6

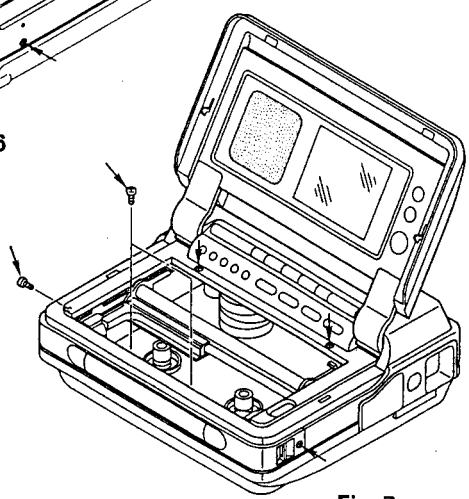

Fig. 7

5.4 Bottom plate removal

1. Remove four screws.

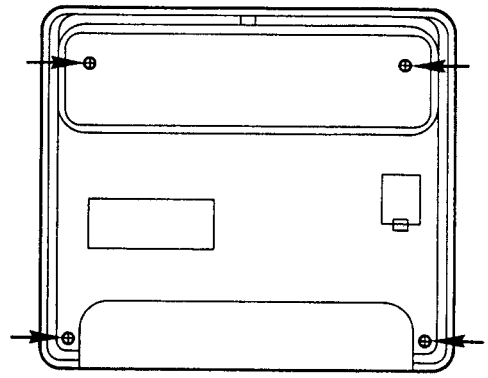

Fig. 8

5.5 P.C. boards removal

1. Release three hooks and remove one screw to remove the P.C. Board Ⓐ.
2. Remove two screws to remove the P.C. Board Ⓑ.
3. Release three hooks to remove the P.C. Board Ⓒ.
4. Remove one screw to remove the P.C. Board Ⓓ.

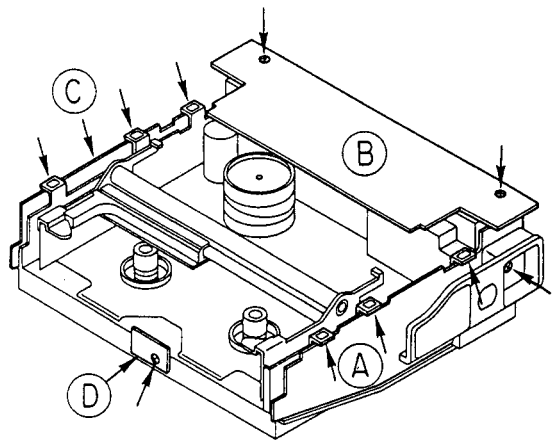

Fig. 9

5.6 Chassis removal

1. Remove three screws.

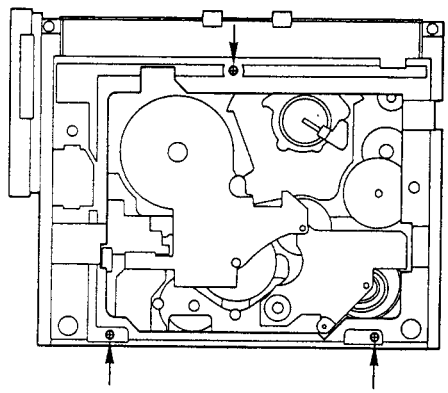

Fig. 10

5.7 LCD monitor unit and operational section removal

1. Remove two blind boards and the screws will be revealed.
2. Remove four screws.

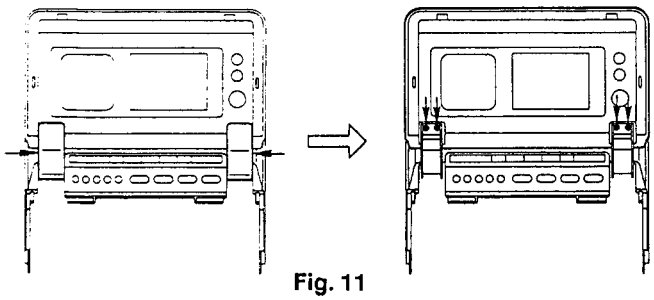

Fig. 11

5.8 Operation P.C. board removal

1. Remove five screws.

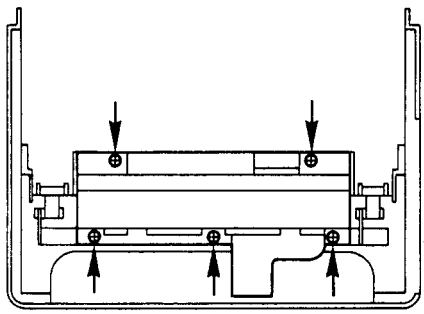

Fig. 12

5.9 LCD monitor unit removal

1. Remove two blind lids and the screws will be revealed.
2. Remove four screws.

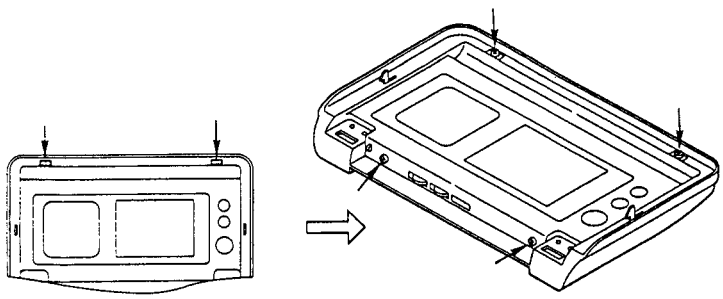

Fig. 13

5.10 LCD monitor P.C. board removal

1. Remove two screws from the P.C. Board Ⓔ.
2. Remove two screws from the P.C. Board Ⓕ.
3. Remove two screws and pull out two connectors from the P.C. Board Ⓖ.

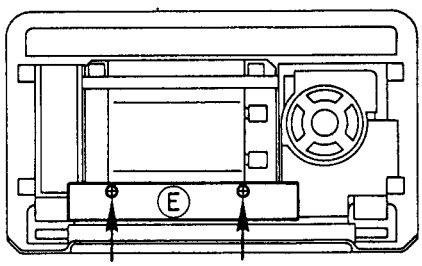

Fig. 14

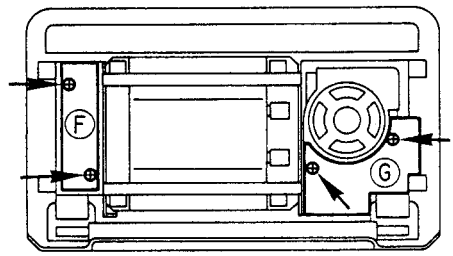

Fig. 15

5.11 LCD board and FL tube removal

1. Remove eight screws.

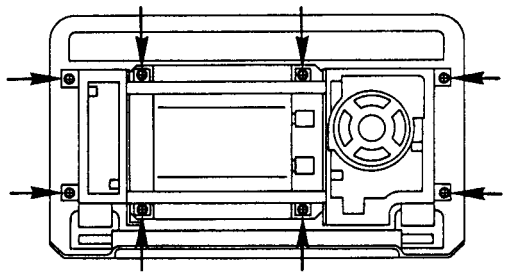

Fig. 16

MECHANICAL ADJUSTMENT IS REFERED TO VKR6855 (4822 726 14818).

5.12 Replacement of DD cylinder unit

Work with extreme care when removing or replacing the DD cylinder unit.

Do not touch video heads during servicing.

(1) Remove the screw (E) to take the Earth Holder Unit out.

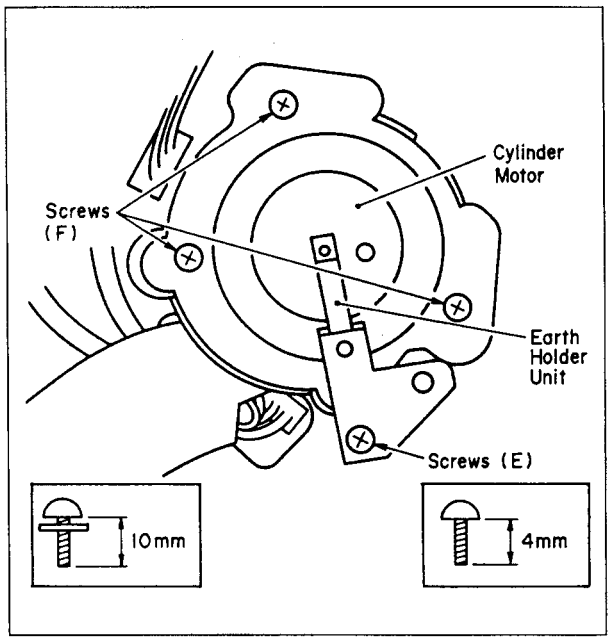

Fig. 17

(2) Remove the 3 screws (F) to take DD cylinder unit out.

NOTE:

Since there is very little clearance between DD cylinder unit and chassis, handle with care.

(3) Reinstall the new DD cylinder unit, tighten the 3 screws (F).

5.13 Replacement of upper cylinder unit

Be sure to observe the following procedures when replacing Upper Cylinder Unit.

(1) REMOVING THE UPPER CYLINDER UNIT

a. Remove the 2 screws as shown in Fig. 18.

b. Unsold the 10 soldered portions indicated by arrows on Circuit Board.

c. Remove the Upper Cylinder Unit by lifting it upwards.

NOTE:

Soldered portion can be easily removed by using solder sucking wire, etc.

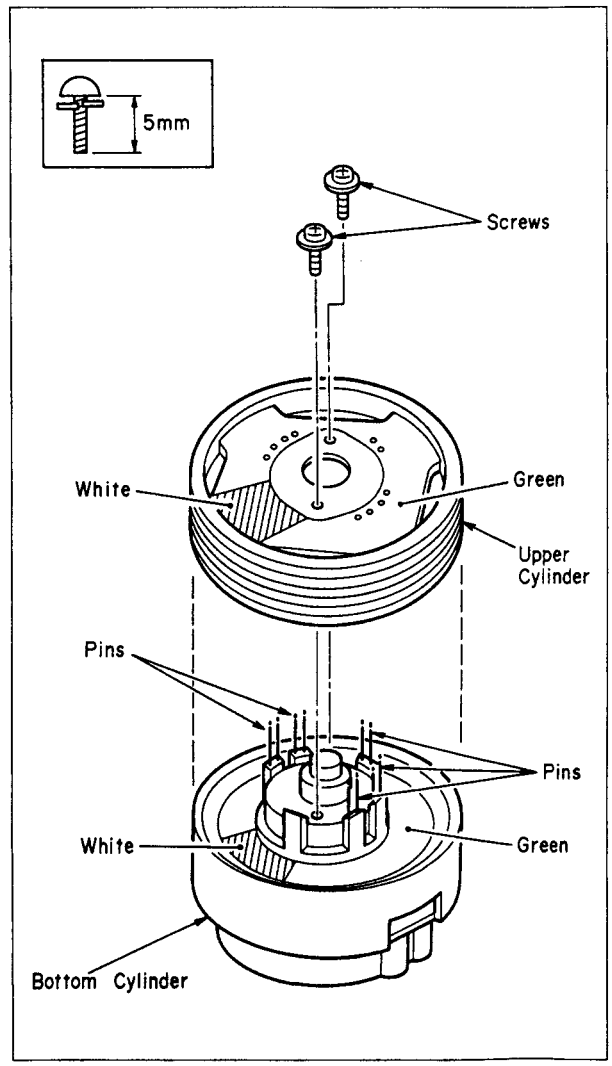

Fig. 18

(2) REINSTALLING THE UPPER CYLINDER UNIT
The Upper Cylinder Unit can be reinstalled by reversing the removal procedure. However, when reinstalling, it must be extremely careful so that both the white and green portions of the Circuit Board on the Upper Cylinder Unit will correctly match the white and green portions of the Circuit Board on Bottom Cylinder as shown in Fig. 19.

NOTE:
If the Upper Cylinder Unit is reversely installed, no colour will appear when playing back a pre-recorded tape.

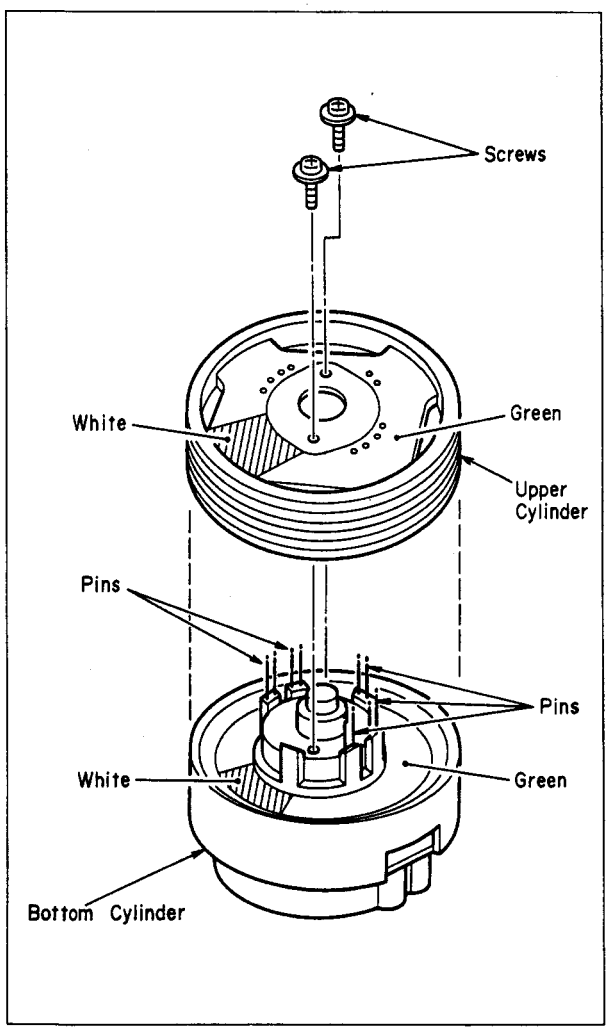

Fig. 19

6. MECHANICAL ADJUSTMENT PROCEDURES

6.1 Confirmation of Brake Torque

* Equipment Required:
  Dial Torque Gauge
  Adaptor for Gauge
* Specification: - - - - - see spec, table (Fig. 21)

(1) Remove the cassette compartment by unscrewire 4 screws.
(2) Attach the adaptor to the torque gauge and place the unit in STOP mode.
(3) Place the torque on the reel table.

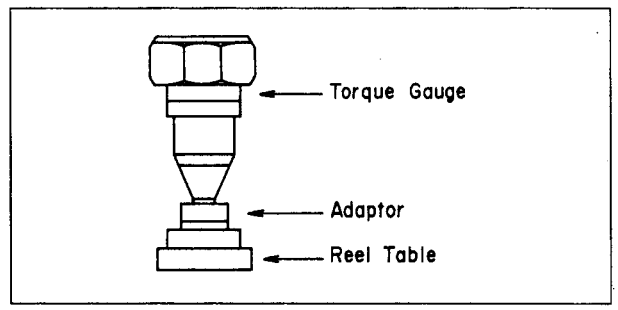

Fig. 20

(4) Turn torque gauge in either direction indicated in the Fig. 21, and read the gauge when the brake begins slipping.

NOTE:
If proper brake torque can not be obtained, check the both take- up and supply clutch gear.

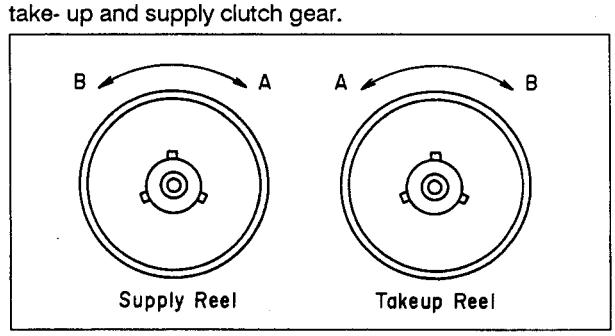

	A	B
Takeup	28 ± 8g-cm	28 ± 8g-cm
Supply	28 ± 8g-cm	28 ± 8g-cm

Fig. 21

6.2 Back tension adjustment

* Equipment Required:
  Back Tension Meter
  VHS Cassette Tape
* Specification: - - - - - 19 ~ 23g

(1) Playback the cassette tape from the beginning and wait until the tape movement get the stabilization. (for approx. 10 ~ 20 seconds)

(2) Insert the Back Tension Meter into the path of a tape, and measure the back tension to be within specification as shown in Fig. 22.

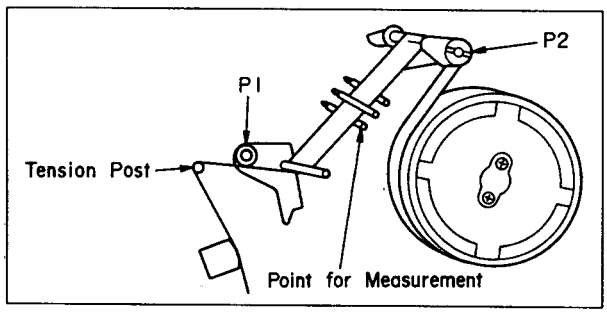

Fig. 22 Measurement of Back Tension

NOTE:

1. While measuring, make sure that the three probes of the meter are all in good contact with the tape.
2. As the tension meter is very sensitive, we recommend taking 3 separate readings.
3. If it is out of specification, change the spring notch as shown in Fig. 23.

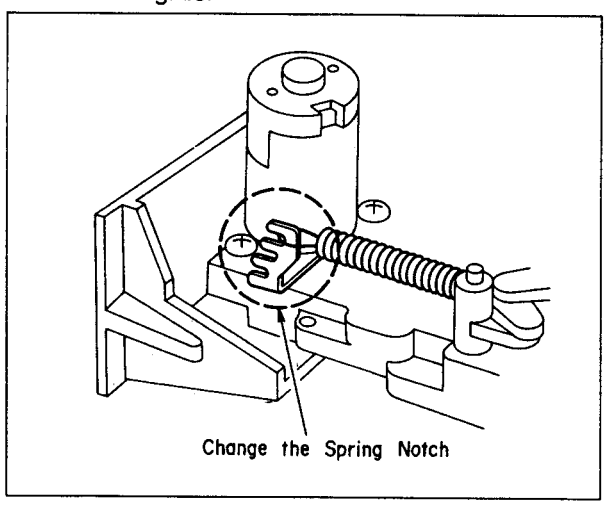

Fig. 23

6.3 Confirmation of A/C head height

NOTE:

Unless the A/C Head is replaced, this procedure should not be performed.

(1) Looking at the lower edge of the control head within the tape running, ensure that lower edge of the tape runs along 0.25mm far from lower edge of the control head (little bit up position from lower edge of control head). If it doesn't, slightly turn the nut (A) in either direction to correct clockwise to lower the head and counterclockwise to raise it.

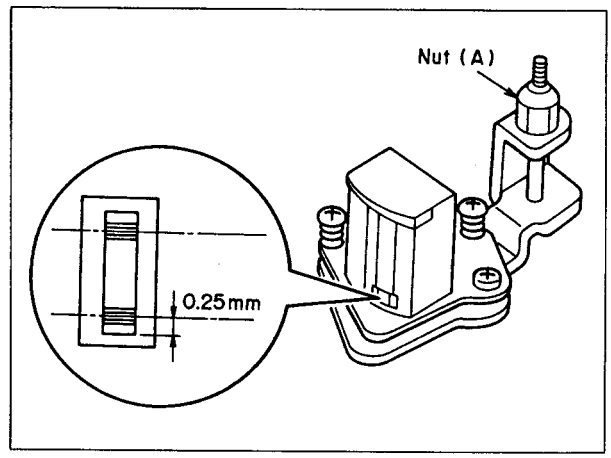

Fig. 24

7. ELECTRICAL ADJUSTMENT PROCEDURES

7.1 Test equipment

- DVM (Digital voltmeter)
  Measuring range : 0.01 – 50V
- Dual trace oscilloscope
  Sensitivity : 0.001 – 50V/Div.
- Frequency counter
  Frequency range : 0 – 50 MHz
- Signal generator
  Sine wave : 0 – 10 MHz
- PAL Video pattern generator
- Colour TV Receiver or Monitor
- Plastic Tip driver and non metallic screwdriver
- VHS Alignment tape (4822 397 30103)
- Extended cable (4822 321 60981)

7.2 Power supply section

7.2.1 Reg. 9V

- Supply the DC voltage 12.6V ± 0.05V to the J102 connector Pin (1) Hot and Pin (2) GND.
- Connect the DVM to TP106 on the power supply section of PD01.
- Put the VCR in the REC mode.
- Adjust the voltage between TP106 and GND to $8.6^{+0.1}_{-0.05}$V with R141 in the VIDEO power supply section of PD01.

7.2.2 Reg. 5V

- Supply the DC voltage 12.6V ± 0.05V to the J102 connector Pin (1) Hot and Pin (2) GND.
- Connect the DVM to TP107 on the VIDEO power supply section of PD01.
- Put the VCR in the REC mode.
- Adjust the voltage between TP107 and GND to 4.91 ± 0.02V with R131 in the power supply section of PD01.

7.3 Servo section

NOTE:
When making adjustments in the servo section of the VCR, always take care that the tape deck has been correctly aligned and that the tracking control is in its centre position.

7.3.1 Head switch point

- Connect the A channel of the oscilloscope to TP454 in the Audio/Video selector section of PV01, sensitivity 1V/Div.
- Connect the B channel of the oscilloscope to TP206 on the servo section of PD01, sensitivity 2V/Div.
- Set the time base of the oscilloscope to 50µsec./Div. (using delay mode)
- Trigger the time base with the signal on TP206 (+ slope).
- Play-back the colour part of the alignment tape.
- Adjust R246 in the servo section PD01 such that 6.5 ± 1 lines prior to the frame sync. pulse are visible. (Fig. 25)

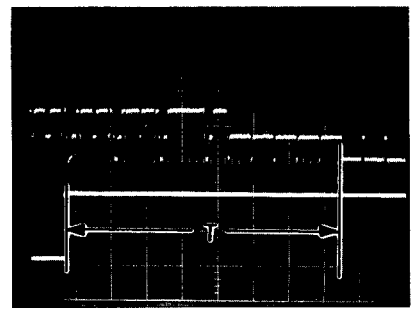

Fig. 25

7.4 Normal audio section

7.4.1 Bias current

- Adjust the VCR to AV input.
- Supply a colour bar signal to the video input terminal.
- Short circuit the audio input terminal.
- Load a cassette tape into the VCR.
- Connect an oscilloscope or a millivoltmeter to TP404 in the Audio section of PV01.
- Connect the shield of the measuring cable to TP405 in the Audio section of PV01.

NOTE:
Maximum length of measuring cable 1 meter.

- Put the VCR in the record mode.
- Adjust the signal level on TP404 with R428 in the audio section of PV01 to 2.1 ± 0.1 mV RMS on the millivoltmeter or to 5.9 ± 0.2 mVp-p on the oscilloscope.

7.5 Video section (Luminance section)

7.5.1 E-E level

- Feed a PAL colour bar with white window signal to the VCR.
- Connect the A channel of the oscilloscope to TP454 in the Audio/video section of the PV01.
- Set the sensitivity of the oscilloscope to 0.2V/Div. and the time base to 10μsec./Div.
- Adjust the signal on TP454 to 1.0 ± 0.05 Vp-p (when terminated with 75 ohm or to 2.0 ± 0.1 Vp-p when unterminated) with R337 in the luminance section of the PV01. (Fig. 26)

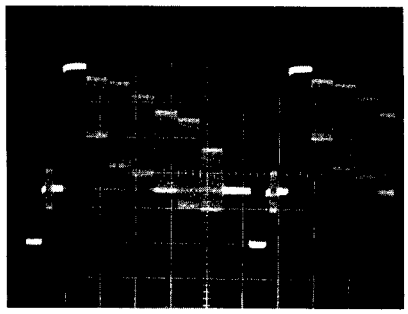

Fig. 26

7.5.2 Sync. tip frequency and deviation

7.5.2a Sync. tip frequency

- Put the VCR in the STOP mode.
- No input signal to the VCR.
- Connect a frequency counter to TP308 in luminance section of PV01.
- Adjust the frequency of the signal on TP308 to 3.8 ± 0.04 MHz with R310 in the luminance section of PV01.

7.5.2b Play-back level

- Load the alignment tape into the VCR.
- Connect the A channel of the oscilloscope to TP454 in the Audio/video section of PV01.
- Set the sensitivity of the scope to 0.2V/Div., the time base to 10μsec./Div.
- Put the VCR in play-back mode.
- Adjust the amplitude of the signal on TP454 to 1.0 ± 0.05 Vp-p. (when terminated with 75 ohm or 2.0 ± 0.1 Vp-p. when unterminated) with R321 in the luminance section of PV01. (Fig. 27)

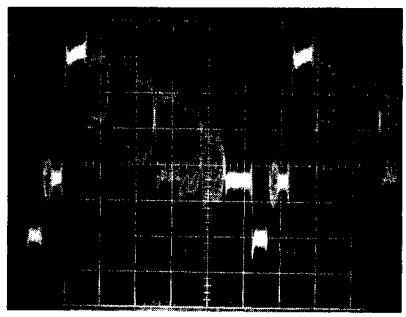

Fig. 27

7.5.2c Deviation

- Put the VCR in the STOP mode.
- Feed a colour bar with white window signal to the VCR.
- Connect the A channel of the oscilloscope to TP308 in the luminance section of PV01.
- Set the sensitivity of the scope to 0.2V/Div., the time base to 0.5μsec./Div., the timebase magnifier to 10 x.
- Adjust A = 0.21 ± 0.01μsec. Fig. 28 with R312 in the luminance section of PV01.
- Adjust from the beginning of the sweep and measure the first line seen, which is the white window trace on the multiple wave form.
  Focus the scope on the first multiple waveform trace (Fig. 28).
- After completion of the adjustment self record a colour bar with white window.
- Play-back the portion just recorded and confirm the level at TP454 is 1.0 ± 0.05 Vp-p. (terminated) or 2.0 ± 0.1 Vp-p. unterminated.
- If the levels are not correct then confirm 5.4.2b (Play-back video level) and readjust the deviation again.

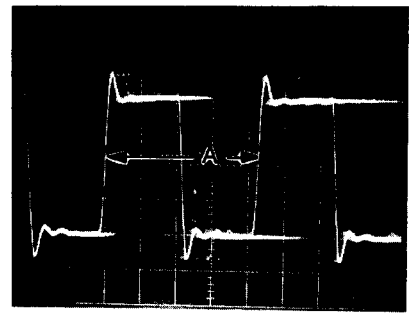

Fig. 28

7.6 Timer tuning section

7.6.1 Clock frequency

- Put the VCR in the stop mode.
- Set clock.
- Connect a frequency counter via a 1:10 probe to TP6K7 in Timer/Tuning section of PL01.
- Adjust the frequency of the signal on Pin 15 of IC6M to 32.768 KHz ± 0.1 Hz with C6L0 in the Tuner timer section of PL01.

7.7 System control section

7.7.1 Under cut adjustment

- Supply the DC voltage 9.9 ± 0.05V to the J102 connector Pin (1) Hot and Pin (2) GND.
- Connect the oscilloscope to TP607 on the system control section of PD01.
- Put the VCR in the REC mode.
- Turn R660 clockwise slowly until the waveform is changed from high to low through the pulse trains.

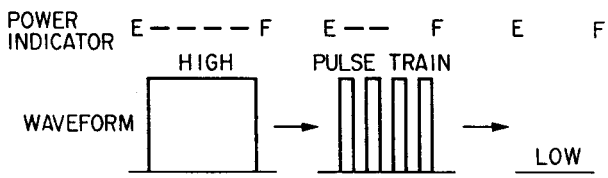

7.7.2 DE-OSD position adjustment

- Display the clock on the LCD monitor.
- Display the battery remaining indicator and counter number on the LCD monitor.
- Adjust the OSC control (R653) on the system control section of PD01 so that the battery and counter position is shown below.

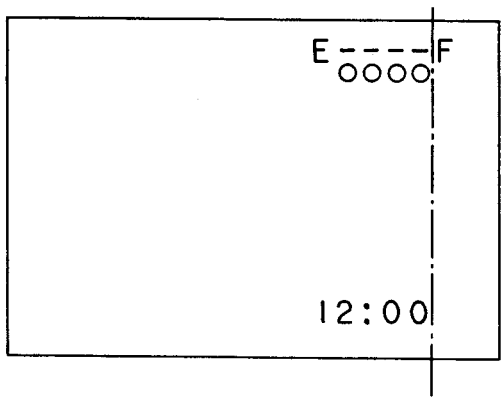

7.8 TV section (RF/IF section)

Initialization of CH MEMO is refered to SERVICE MODE (page 1-4).

7.8.1 TV 5V

- Connect the DC voltmeter to TP1A4 in RF/IF/CHROMA power supply section of PL01.
- Turn R1A2 on RF/IF/CHROMA power supply section of PL01 until the voltage of TP1A4 becomes 5V ± 0.05V.

7.8.2 PAL. DET.

- Set the system switch to the PAL mode.
- Feed the non-modulation signal of 38.9 MHz, 70 dBμV to TP708 on RF/IF section of PL02.
- Connect the oscilloscope or DC voltmeter to TP701 on RF/IF section of PL01.
- Feed the external power supply to TP703 on RF/IF section of PL01.
- Change the voltage range within DC 0 ~ 2V until the DC voltage of TP701 becomes 1.5V.
- Turn L701 on RF/IF section of PL01 until the DC voltage of TP701 becomes minimum.

7.8.3 SECAM L' DET.

- Set the system switch to the SECAM mode.
- Set the VHF-LOW channels (2 ~ 4ch) to the receiving status.
- Connect the non-modulation signal of 33.4 MHz, 70 dBμV to TP708.
- Connect the oscilloscope or DC voltmeter to TP701.
- Feed the external power supply to TP703.
- Change the voltage range within DC 0 ~ 2V until the DC voltage of TP701 becomes 1.5V.
- Turn C747 on RF/IF section of PL01 until the DC voltage of TP701 becomes minimum.

7.8.4 PAL AFT

- Set the system switch to the PAL mode.
- Feed the non-modulation signal of 38.9 MHz, 70 dBμV to TP708.
- Connect the oscilloscope or DC voltmeter to TP702 on RF/IF section of PL01.
- Turn L702 on RF/IF section of PL01 until the core is set to the deepest point.
  Adjust the DC voltage of TP702 to 2.5V by pulling out the core.

7.8.5 SECAM L' AFT

- Set the system switch to the SECAM mode.
- Set the VHF-LOW channels (2 ~ 4ch) to the receiving status.
- Feed the non-modulation signal of 33.4 MHz, 70 dBμV to TP708.
- Connect the oscilloscope or DC voltmeter to TP702.
- Turn C752 on RF/IF section of PL01 until the DC voltage of TP702 becomes 2.5V.
- Repeat the section 5.8.4 and 5.8.5 until the DC voltage of TP702 becomes 2.5V ± 0.5V.

7.8.6 RF AGC

- Receive the PAL test pattern to the VHF-HIGH channel (27ch) and set the input level to 48 dBμV.
- Connect the 1 kHz signal of low frequency oscillator to TP707 on RF/IF section of PL02 as shown below and set the TP707 level to 50 mVp-p.

- Connect the oscilloscope to TP701 and set the oscilloscope so that the 1 field waveform can be obtained.
- Turn R737 on RF/IF section of PL01 and check that the ripple on the 1 field waveform of TP701 becomes bigger.
- Turn R737 again until the ripple above is disappeared.
- Set the RF input level to 51 dBμV and check that the ripple is appeared.

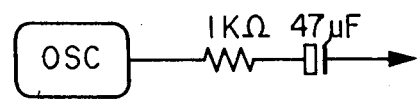

7.8.7 PAL SIF trap

- Receive the PAL-B/W stair step.
- Connect the oscilloscope to TP701 and set the oscilloscope so that the 1 line waveform can be obtained.
- Adjust L703 on RF/IF section of PL01 so that the 5.5 MHz beat amplitude on the TP701 video waveform becomes minimum.

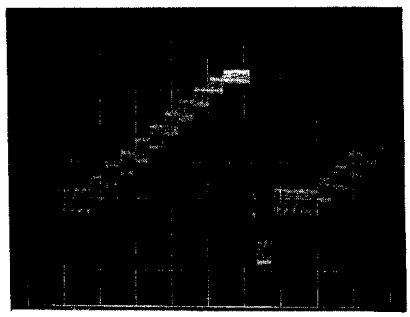

7.9 LCD section (Chroma decoder section)

All test points and adjustment points used for this section are on chroma decoder section of PL01.

7.9.1 VDC

- Receive the PAL-B/W stair step.
- Set the bright control to the center position.
- Turn R8C4 until the contrast on the screen becomes maximum.

7.9.2 PAL burst cleaning

- Receive the PAL Philips pattern.
- Set the color control to the center position.
- Turn L8A2 until the both ends of line on the screen becomes clear gray.

* Should not be red or blue.

7.9.3 PAL 1H DL. AMP. (B – Y)

- Receive the red raster.
- Connect the oscilloscope to TP8B3 and set the oscilloscope so that the 1H waveform can be obtained.
- Turn R8G9 until the signal amplitude becomes minimum.

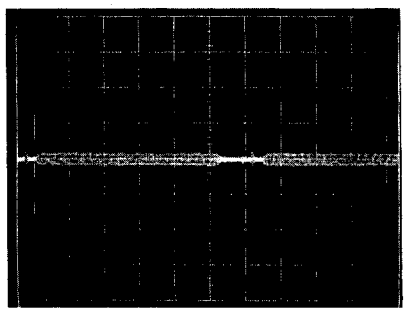

7.9.4 PAL 1H DL. AMP. (R – Y)

- Receive the blue raster.
- Connect the oscilloscope to TP8B4 and set the oscilloscope so that the 1H waveform can be obtained.
- Turn R8G9 until the signal amplitude becomes minimum.
- Repeat the section 7.9.3 and 7.9.4.

* Adjust so that the waveform amplitude of TP8B3 and TP8B4 becomes minimum and equal.

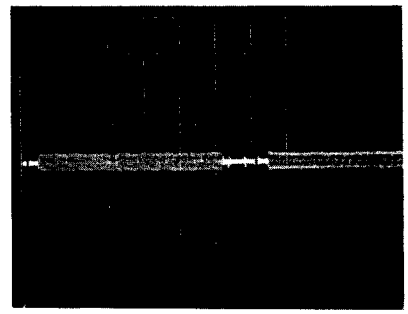

7.9.5 PAL 1H DL phase

- Receive the PAL color bar.
- Connect the oscilloscope to TP8A8.
- Turn L8A6 until two lines become superimposed.

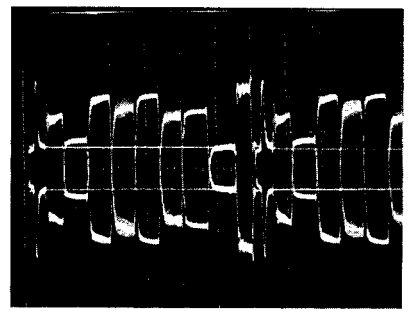

7.9.6 SECAM bell filter

- Receive the SECAM color bar to the VHF-LOW channel (2CH – 4CH).
- Connect the oscilloscope to TP8B1 and set the oscilloscope so that the 1H waveform can be obtained.
- Turn L8B0 until the waveform amplitude becomes aligned.

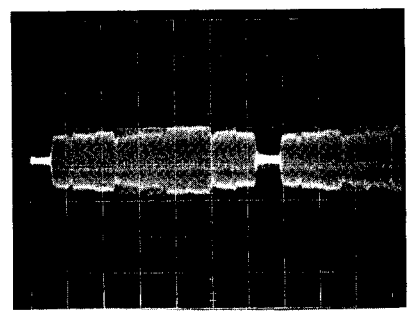

8. LOCATION OF TEST POINTS AND ADJUSTMENT POINTS

PD01 (Viewed From Dip Side)

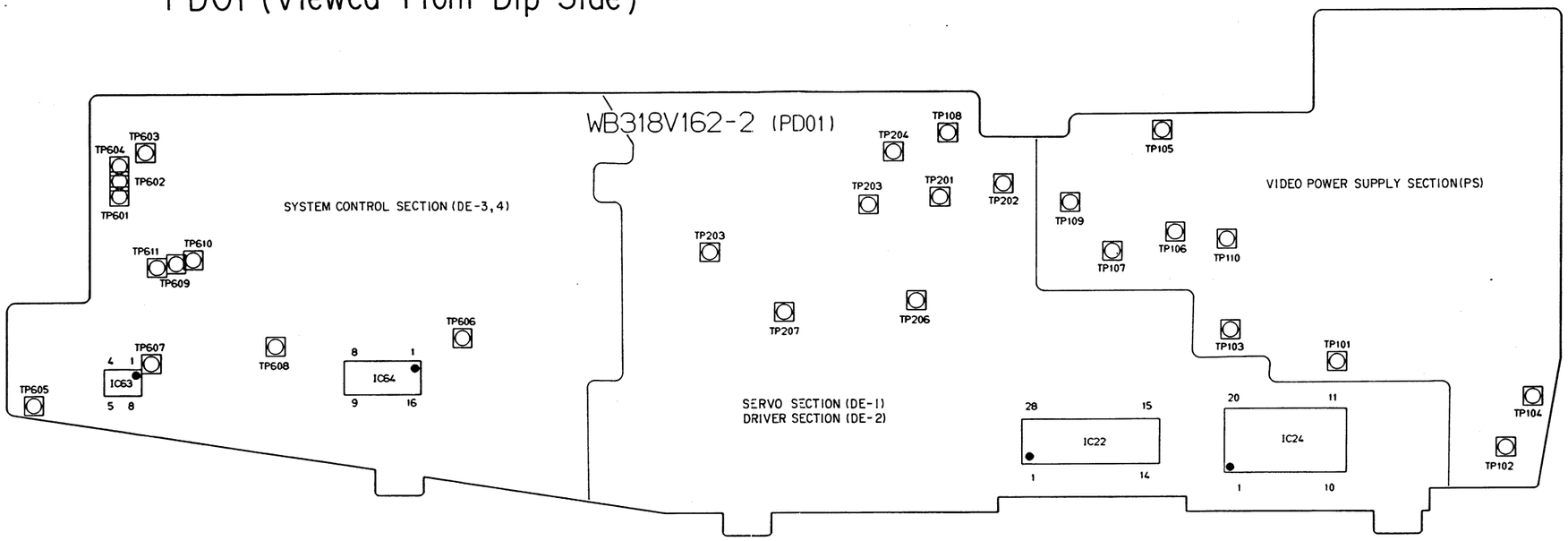

PD01 (Viewed From Reflow Side)

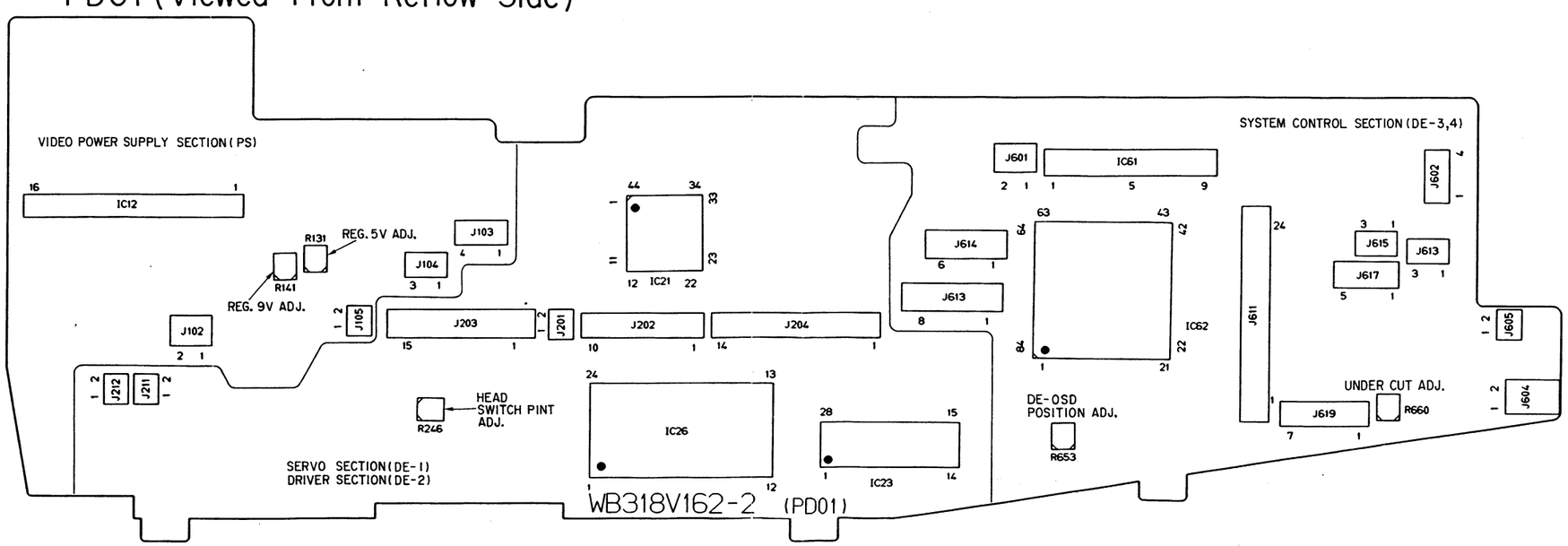

7.9.7 SECAM ID filter

- Receive the SECAM color bar to the VHF-LOW channel (2CH – 4CH).
- Connect the oscilloscope or DC voltmeter to TP8B2.
- Turn L8A9 until the DC voltage of TP8B2 becomes maximum (approx. 2.2V).

7.9.8 SECAM B-Y DET

- Receive the SECAM color bar to the VHF-LOW channel (2CH – 4CH).
- Connect the oscilloscope to TP8A1 and set the oscilloscope so that the 1H waveform can be obtained.
- Turn L8A8 until the DC level of black and blanking becomes equal.

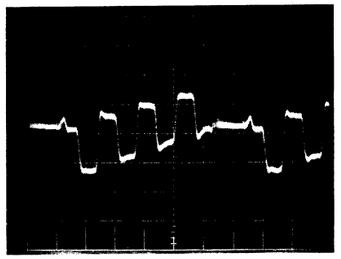

7.9.9 SECAM R-Y DET.

- Receive the SECAM color bar to the VHF-LOW channel (2CH – 4CH).
- Connect the oscilloscope to TP8A2 and set the oscilloscope so that the 1H waveform can be obtained.
- Turn L8A7 until the DC level of black and blanking becomes equal.

PV01(Viewed From Dip Side)

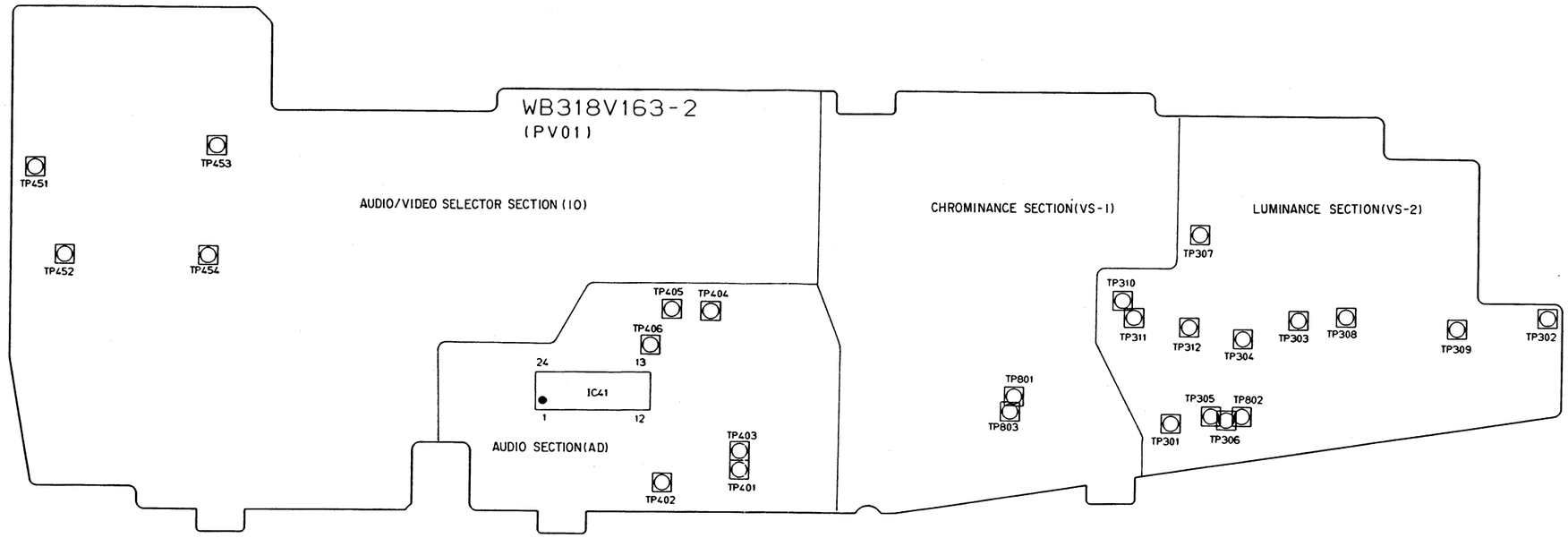

PV01(Viewed From Reflow Side)

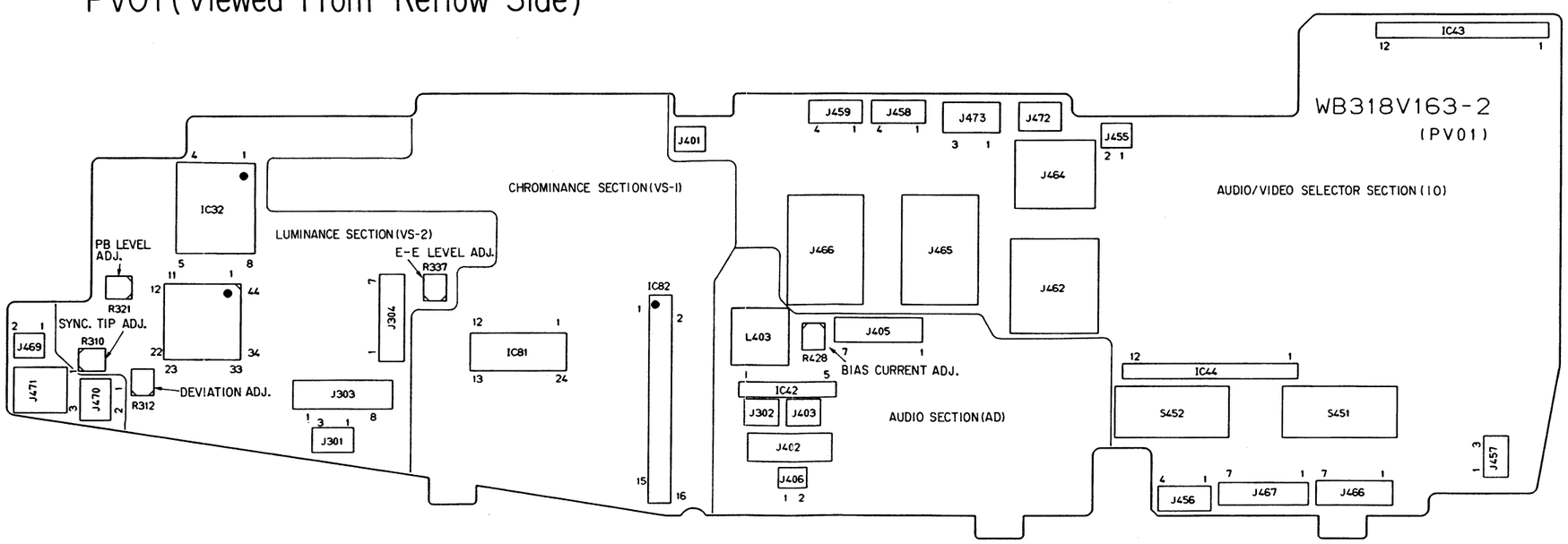

PL01 (Viewed From Dip Side)

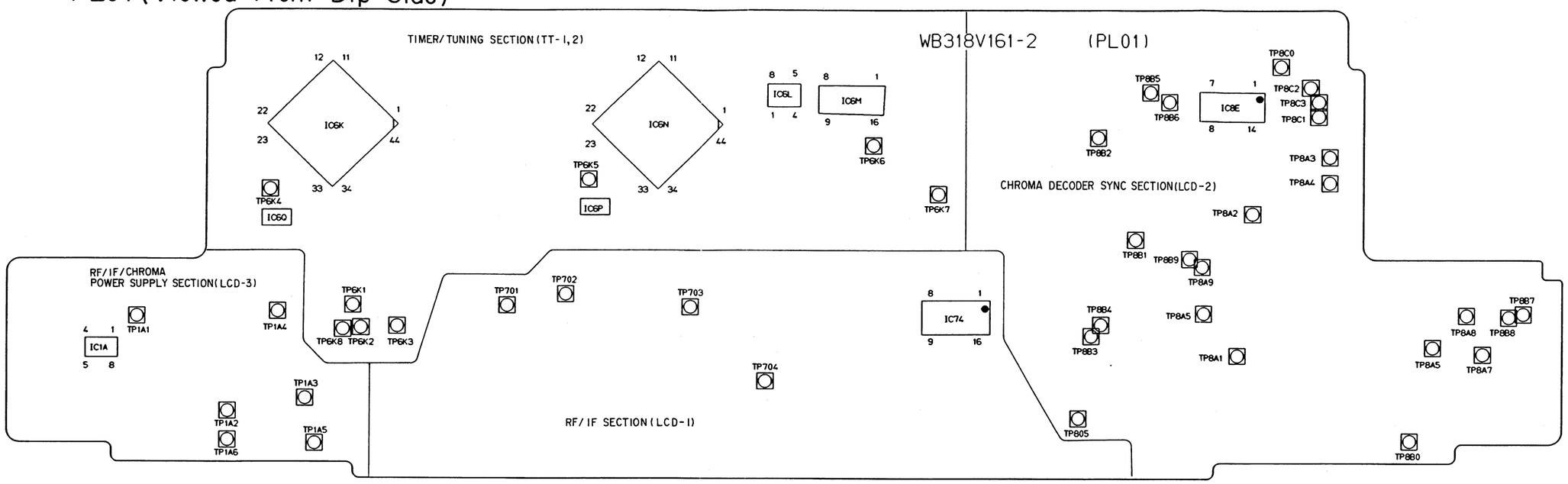

PL01 (Viewed From Reflow Side)

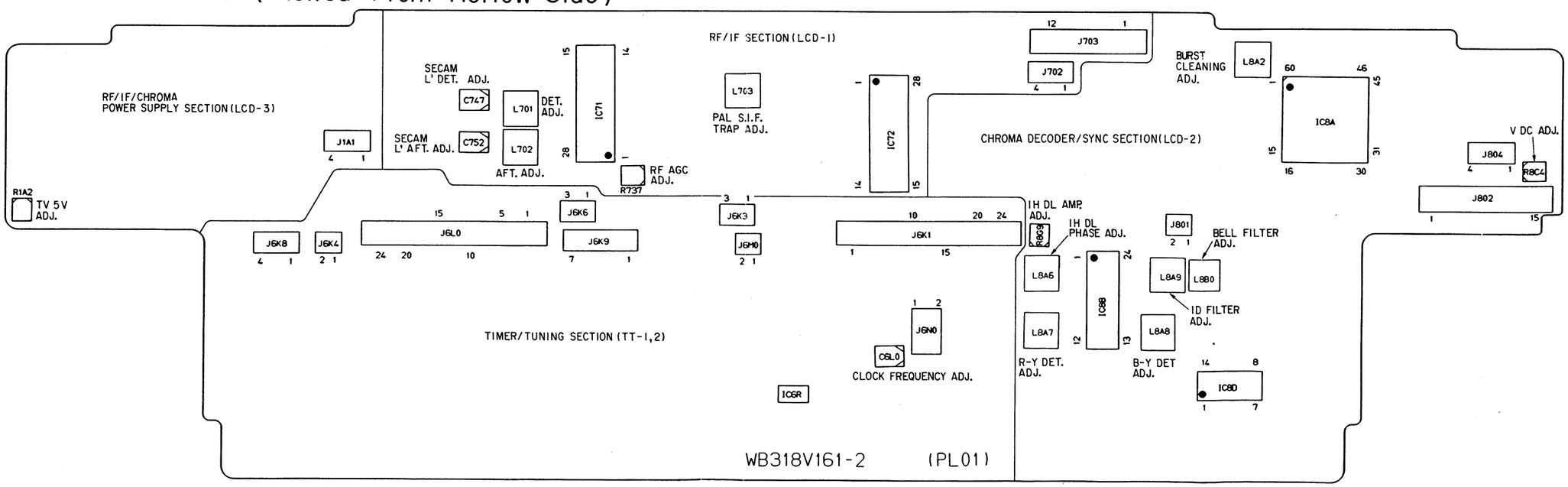

OVERALL BLOCK DIAGRAM 2

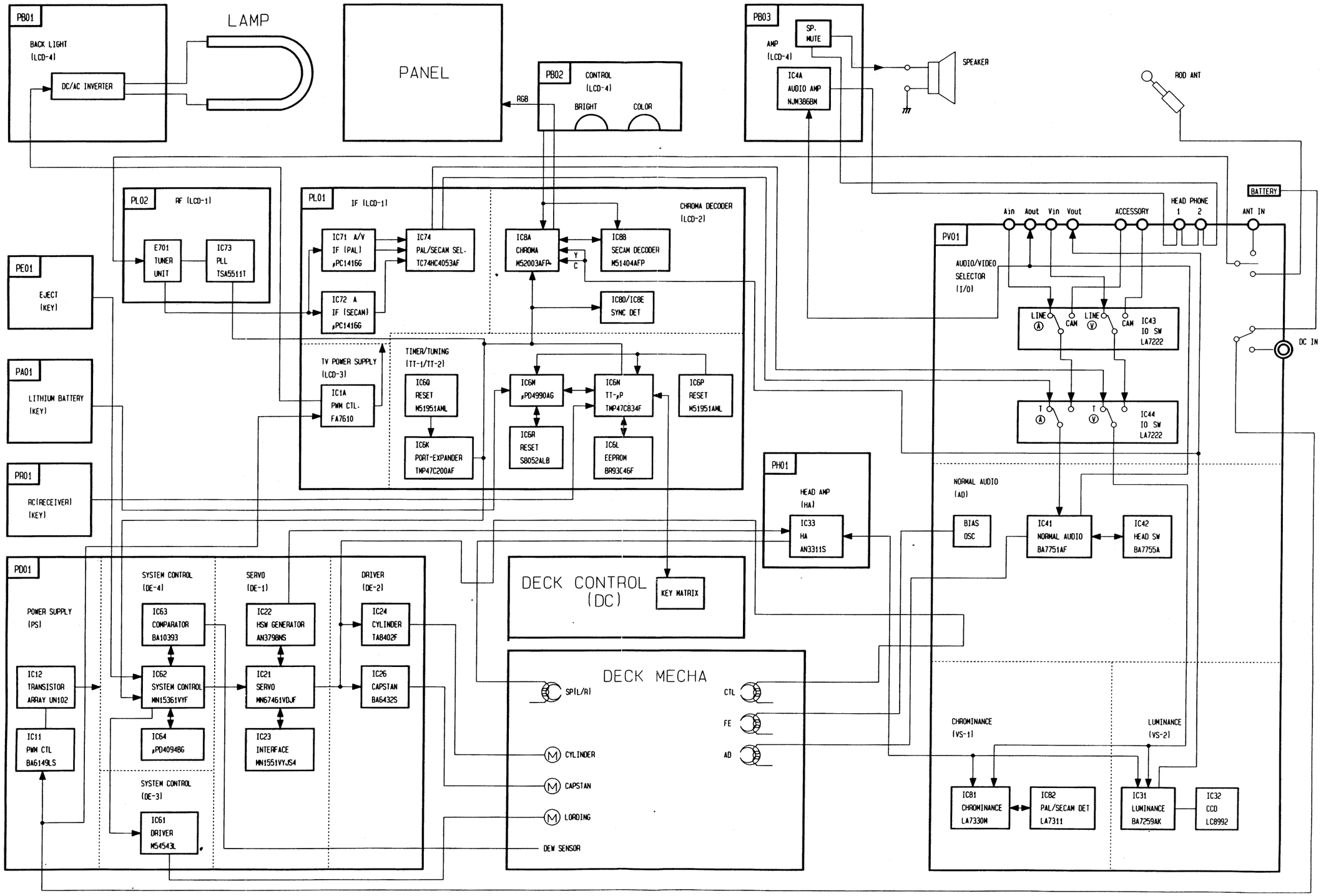

OVERALL BLOCK DIAGRAM 1

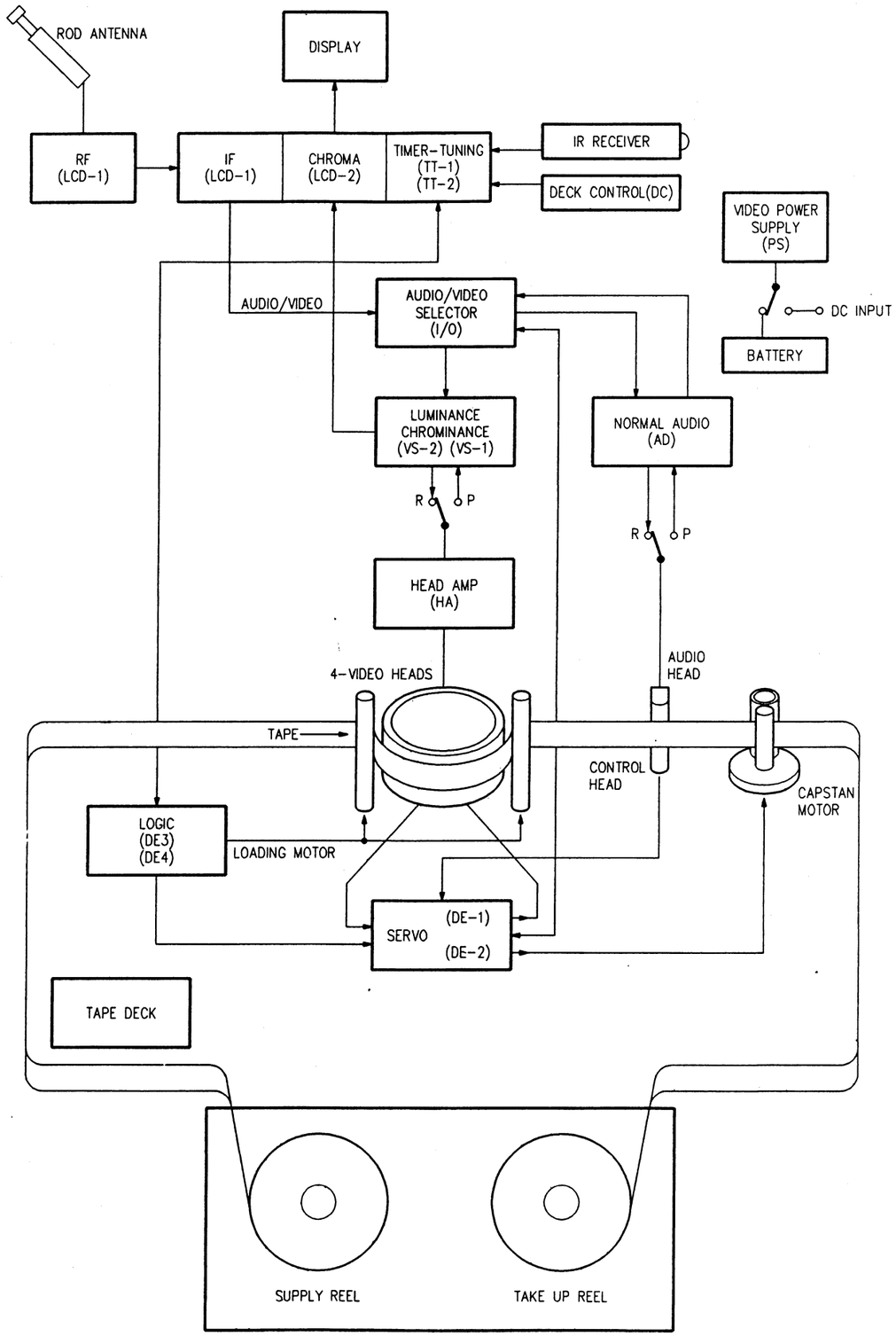

BLOCK DIAGRAM (DE)
(SERVO BLOCK)

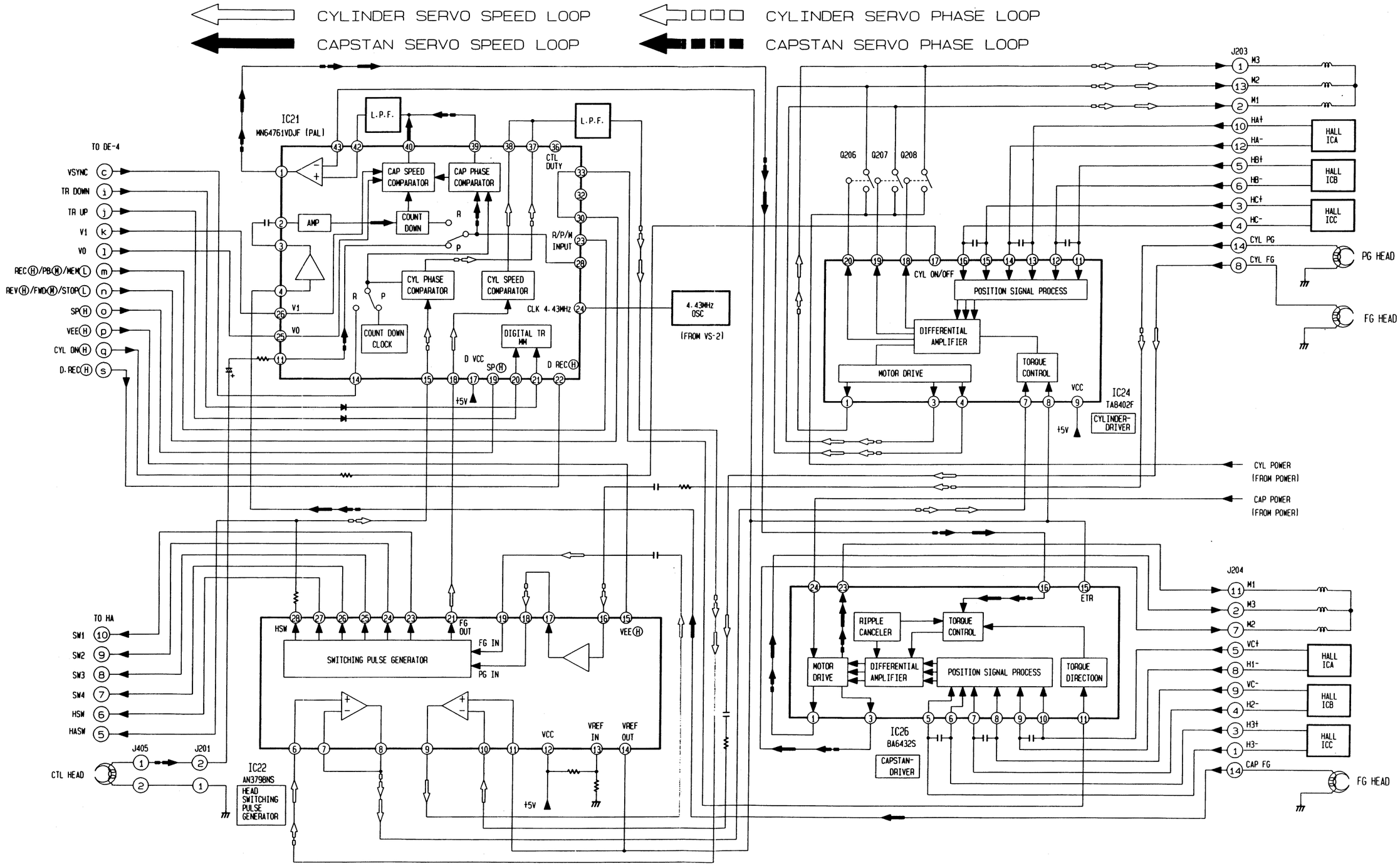

BLOCK DIAGRAM (PS)

(VIDEO POWER SUPPLY BLOCK)

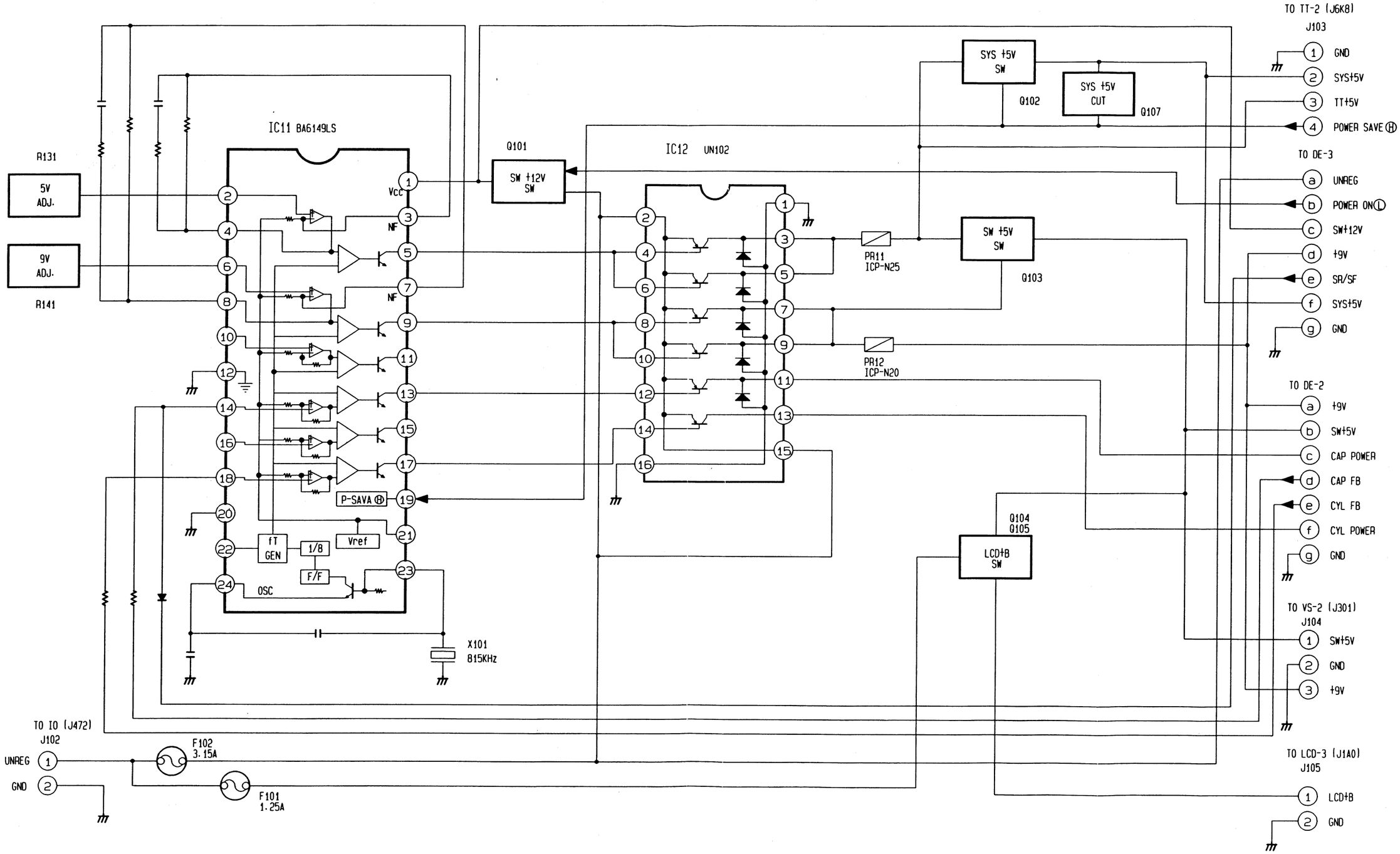

BLOCK DIAGRAM (TT)
(PORT-EXPANDER BLOCK)

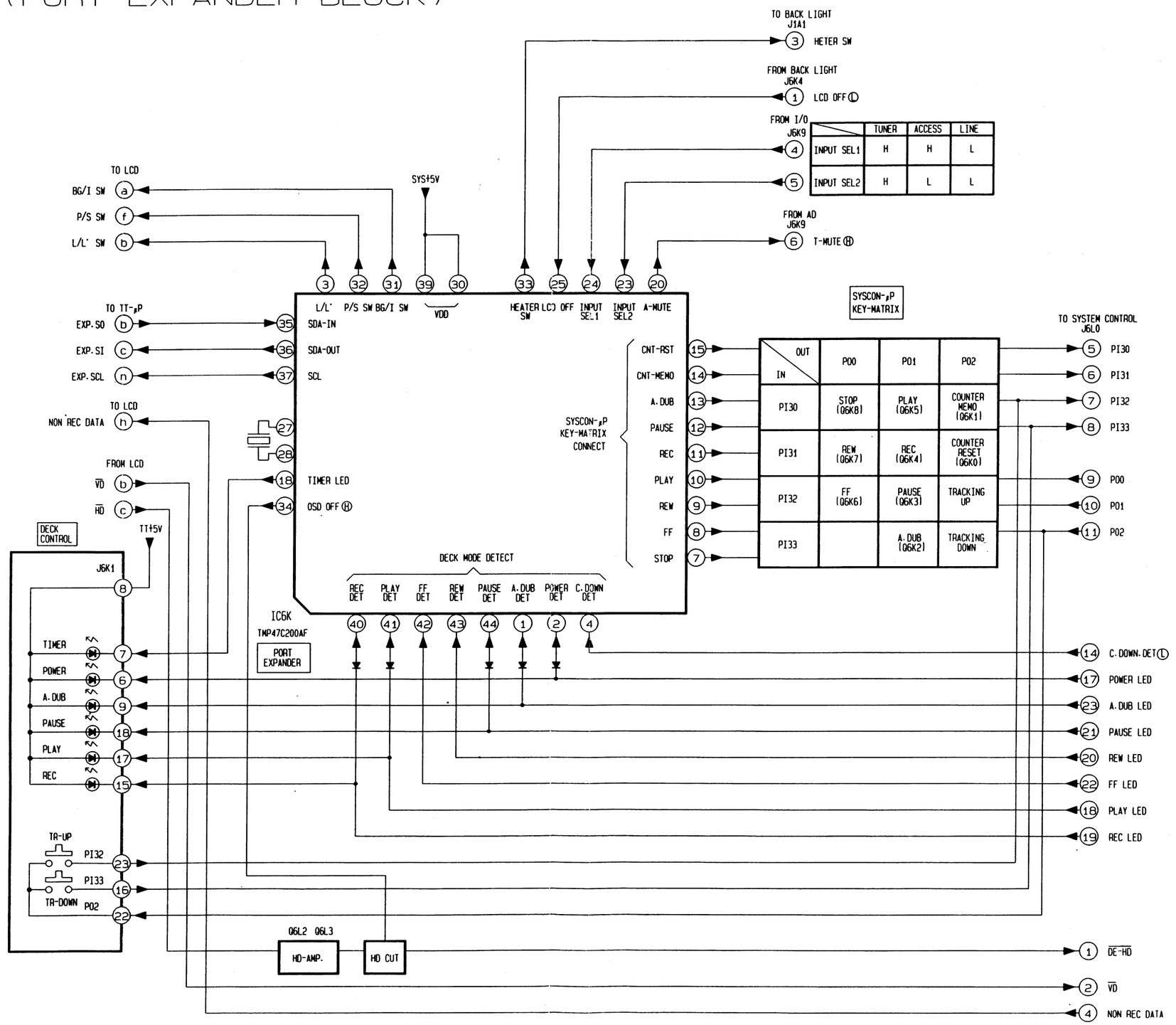

BLOCK DIAGRAM (DE)
(SYSTEM CONTROL BLOCK)

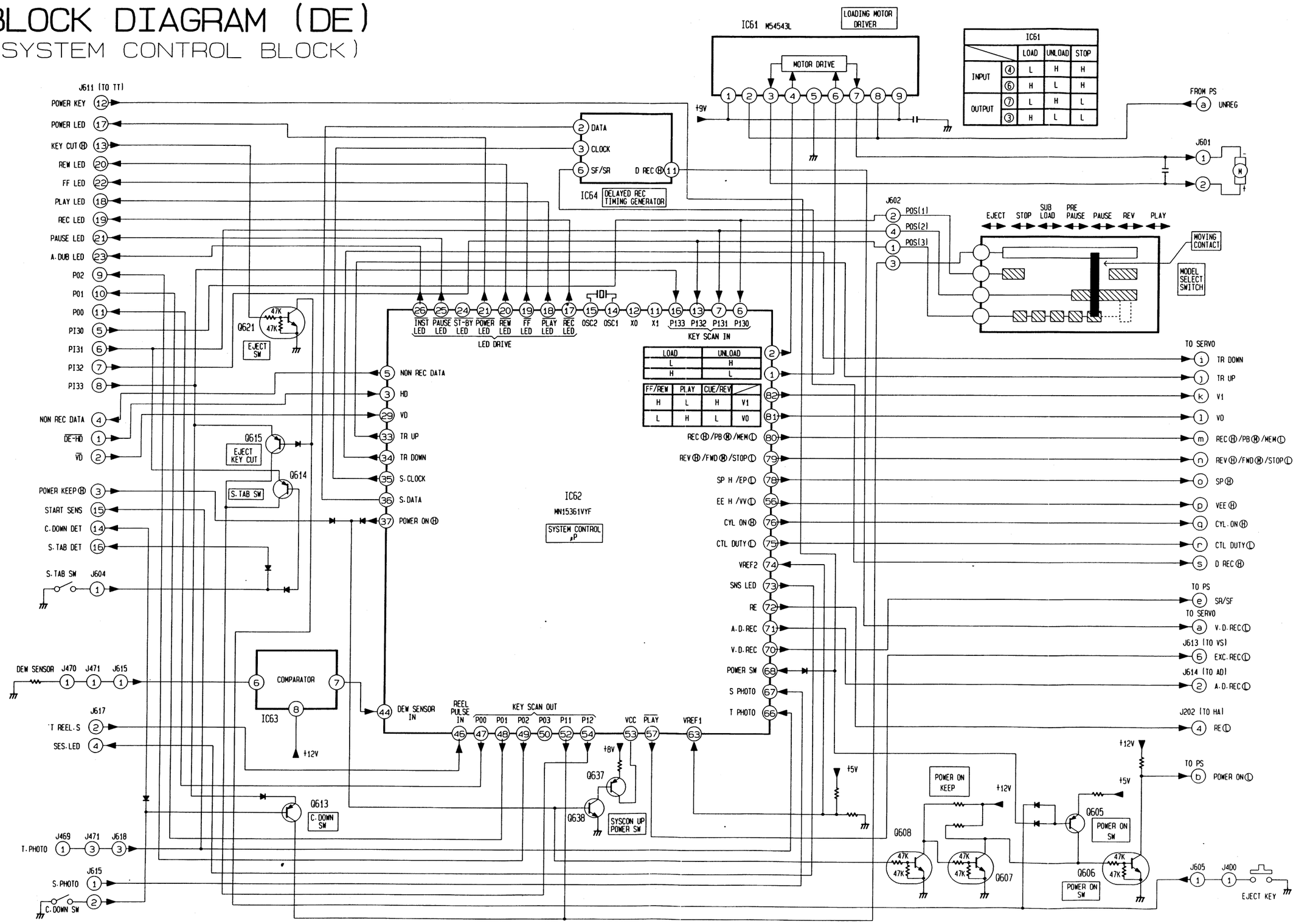

BLOCK DIAGRAM (LCD-1)
(RF/IF BLOCK)

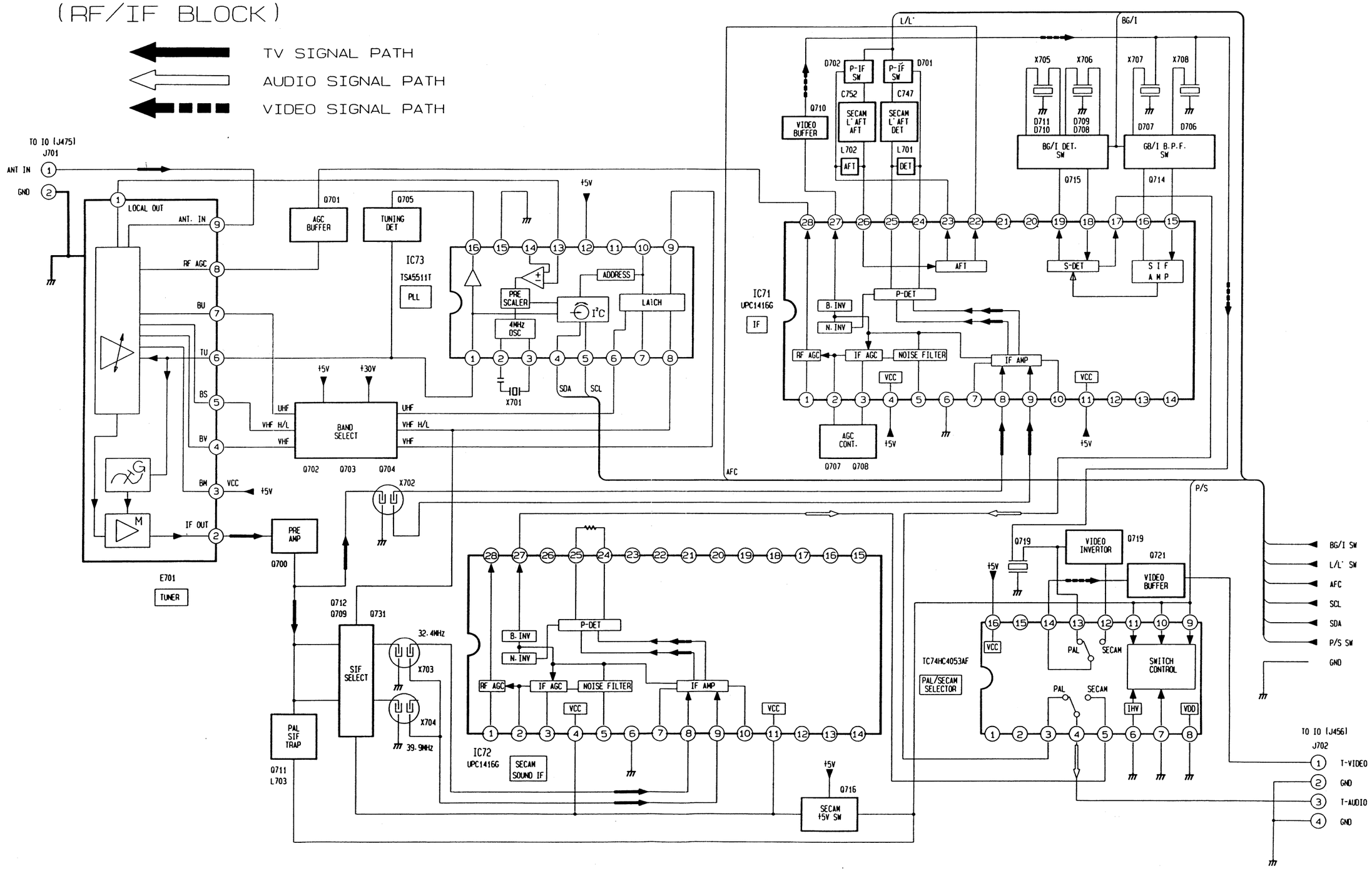

BLOCK DIAGRAM (TT)

(TIMER TUNER BLOCK)

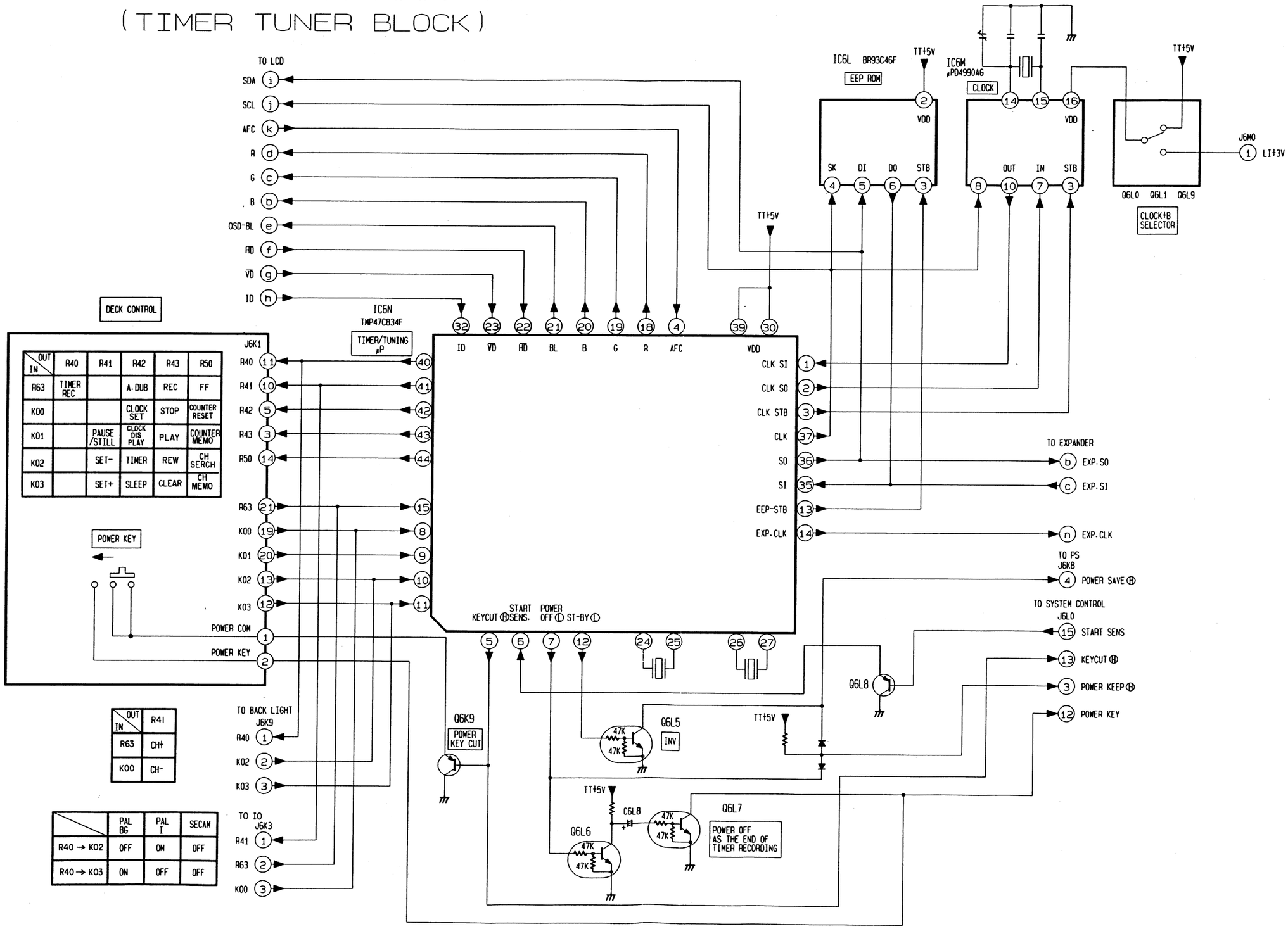

OUT / IN	R40	R41	R42	R43	R50
R63	TIMER REC		A.DUB	REC	FF
K00			CLOCK SET	STOP	COUNTER RESET
K01		PAUSE /STILL	CLOCK DIS PLAY	PLAY	COUNTER MEMO
K02		SET-	TIMER	REW	CH SERCH
K03		SET+	SLEEP	CLEAR	CH MEMO

OUT / IN	R41
R63	CH+
K00	CH-

	PAL BG	PAL I	SECAM
R40 → K02	OFF	ON	OFF
R40 → K03	ON	OFF	OFF

BLOCK DIAGRAM (LCD-3)

(RF/IF/CHROMA POWER SUPPLY BLOCK)

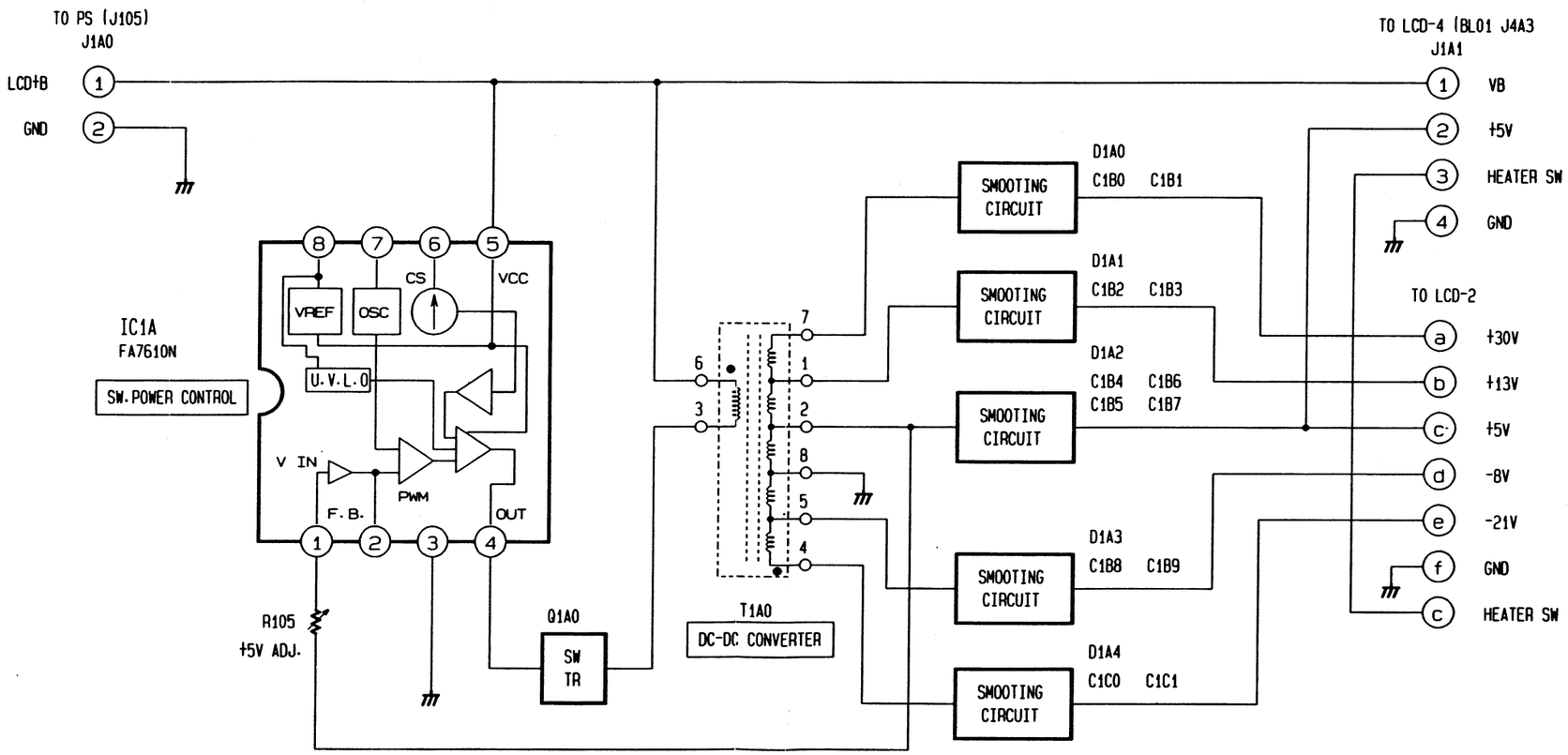

BLOCK DIAGRAM (LCD-2)
(CHROMA DECODER/SYNC BLOCK)

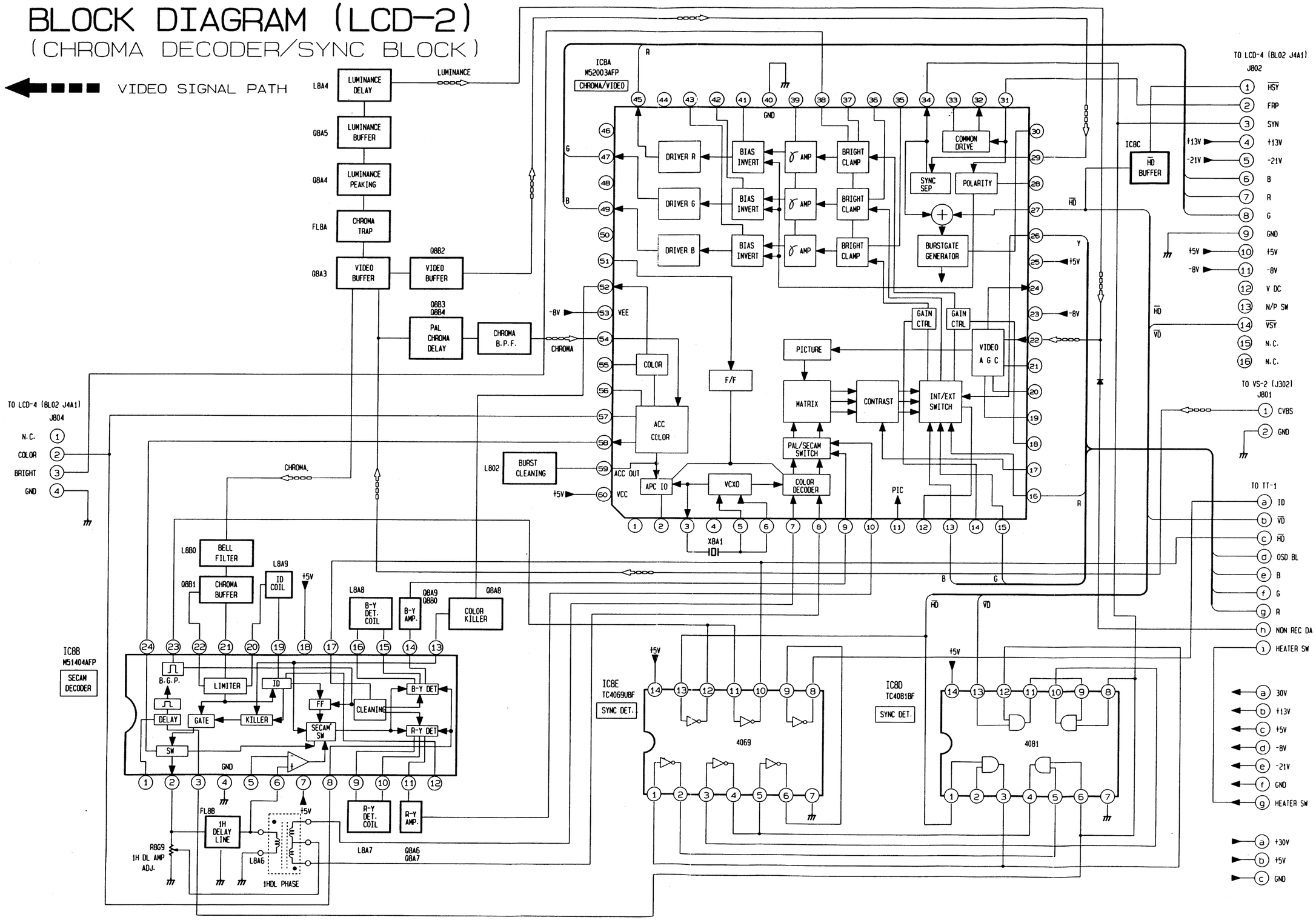

BLOCK DIAGRAM (VS-1)
(CHROMINANCE BLOCK)

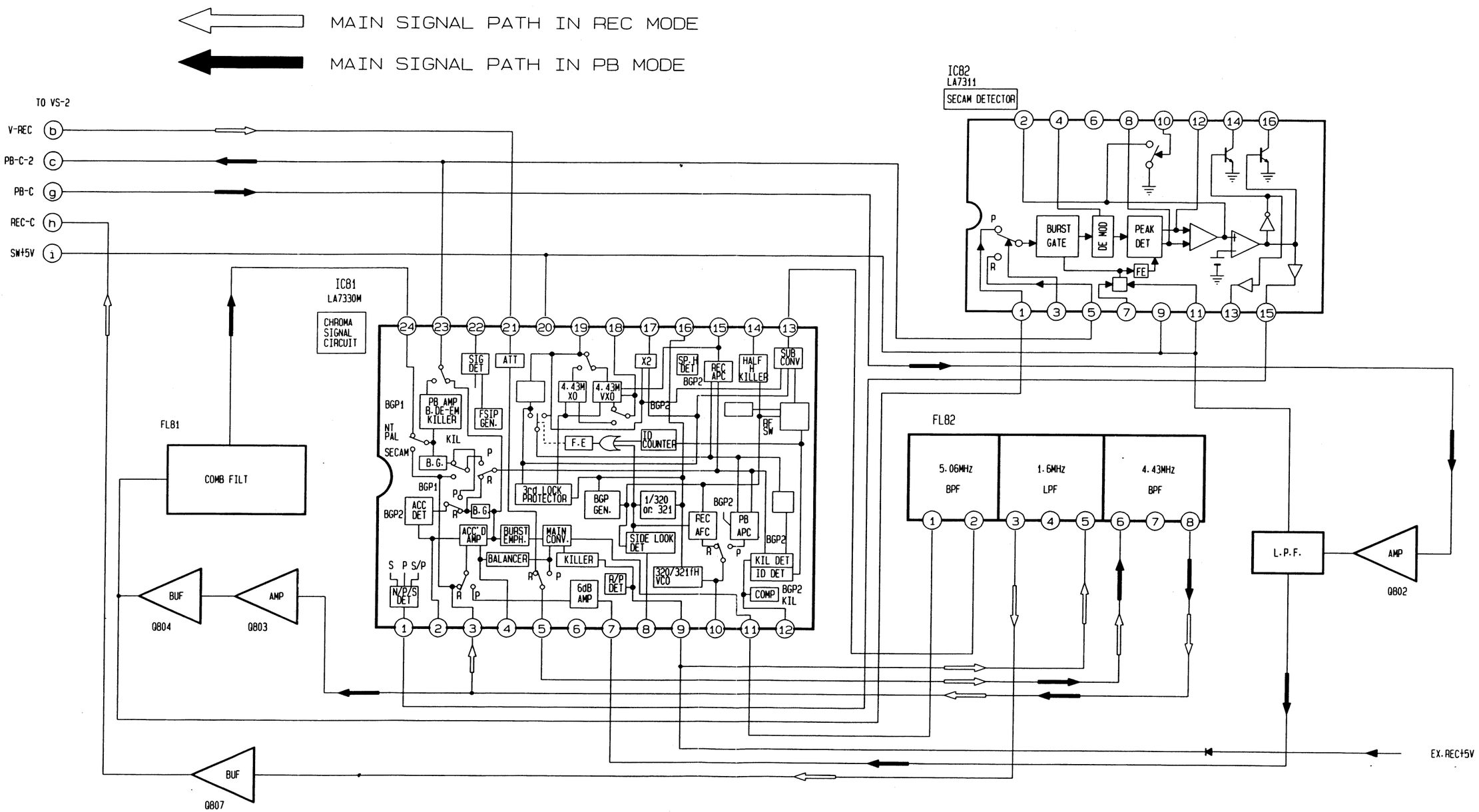

BLOCK DIAGRAM (LCD-4)

(BACK LIGHT/AMP/CONTROL BLOCK)

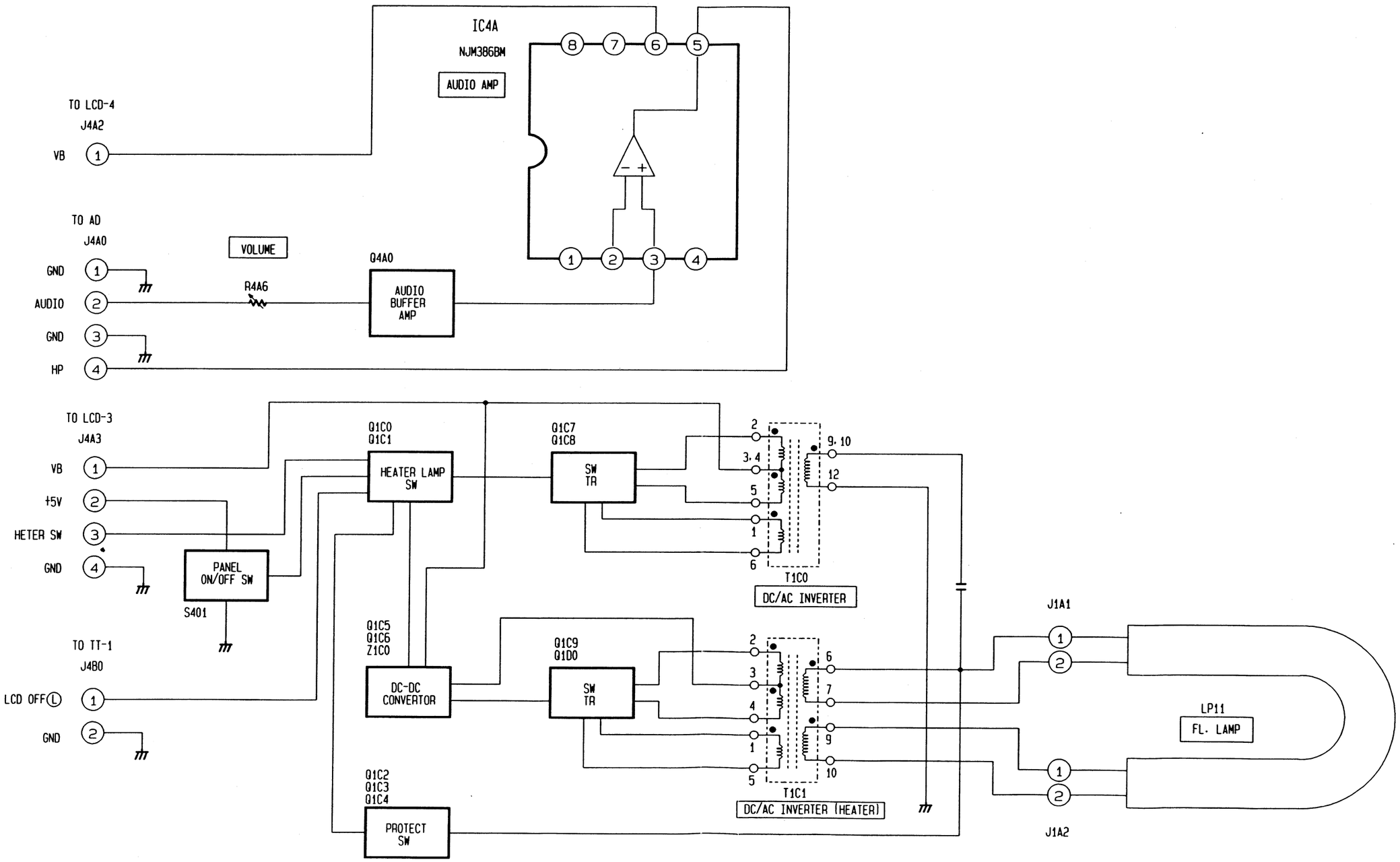

BLOCK DIAGRAM (AD)
(NORMAL AUDIO BLOCK)

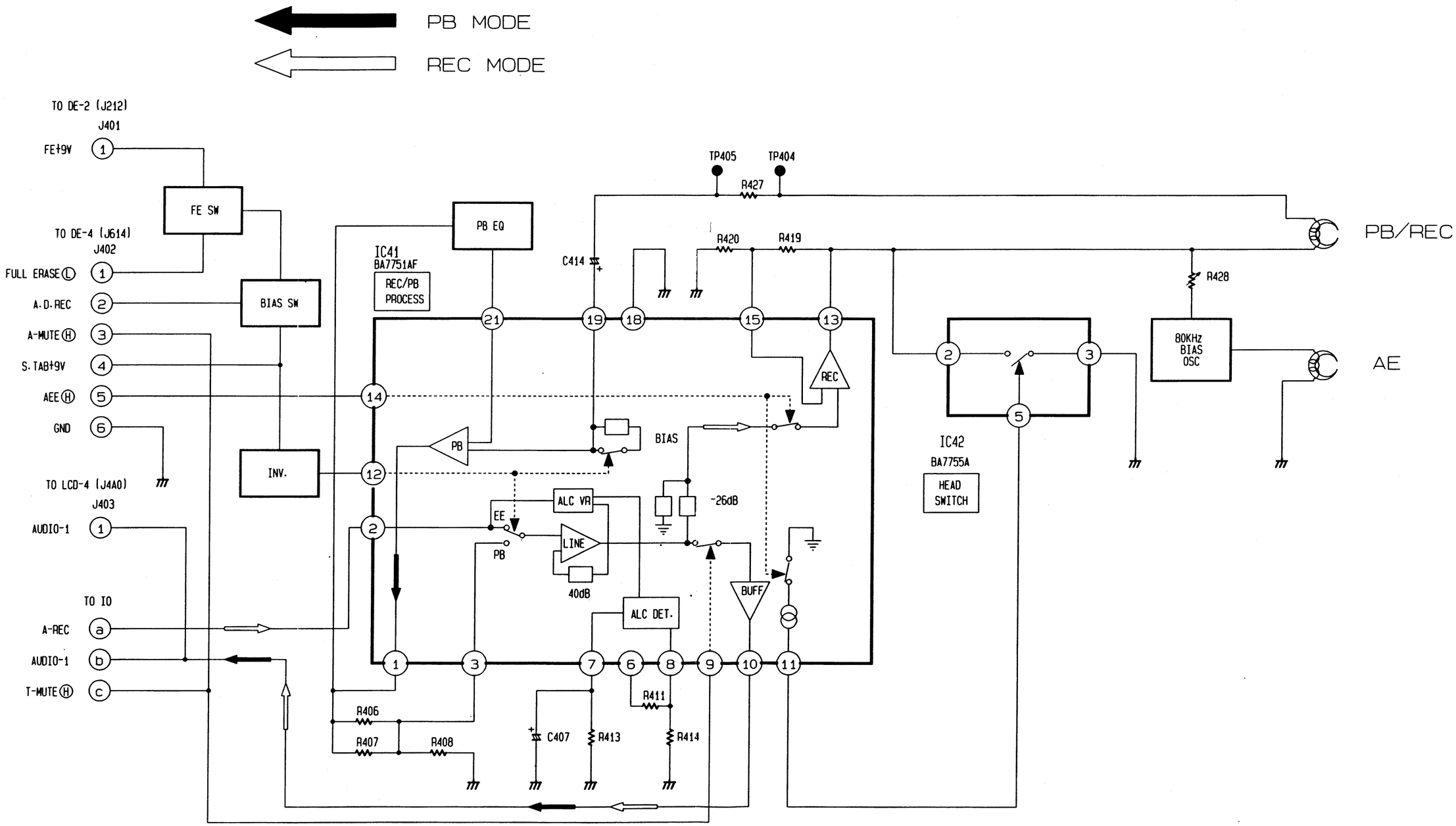

BLOCK DIAGRAM (VS-2)
(LUMINANCE BLOCK)

MAIN SIGNAL PATH IN REC MODE

MAIN SIGNAL PATH IN PB MODE

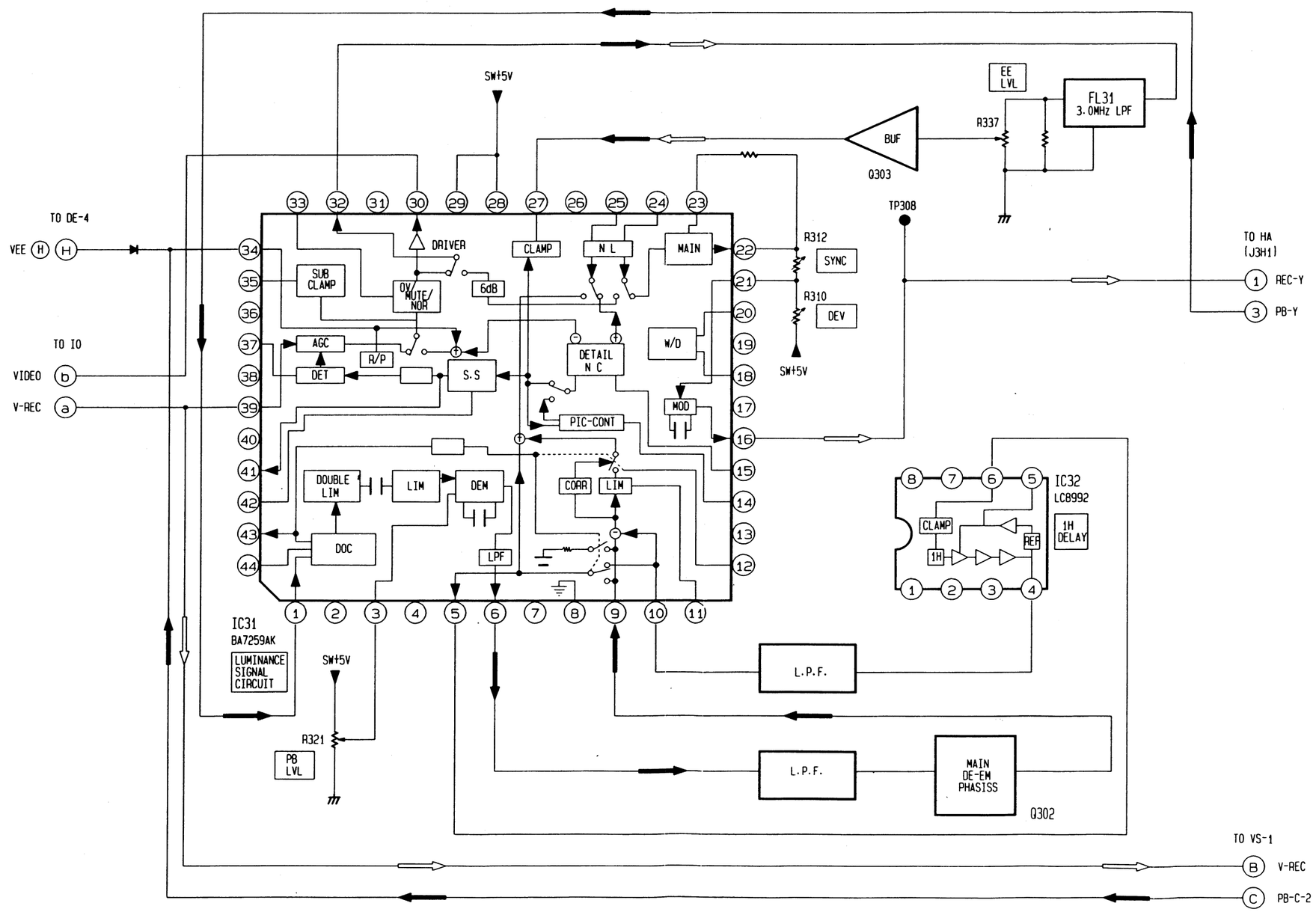

BLOCK DIAGRAM (HA)
(HEAD AMP BLOCK)

MAIN SIGNAL PATH IN PB

MAIN SIGNAL PATH IN REC

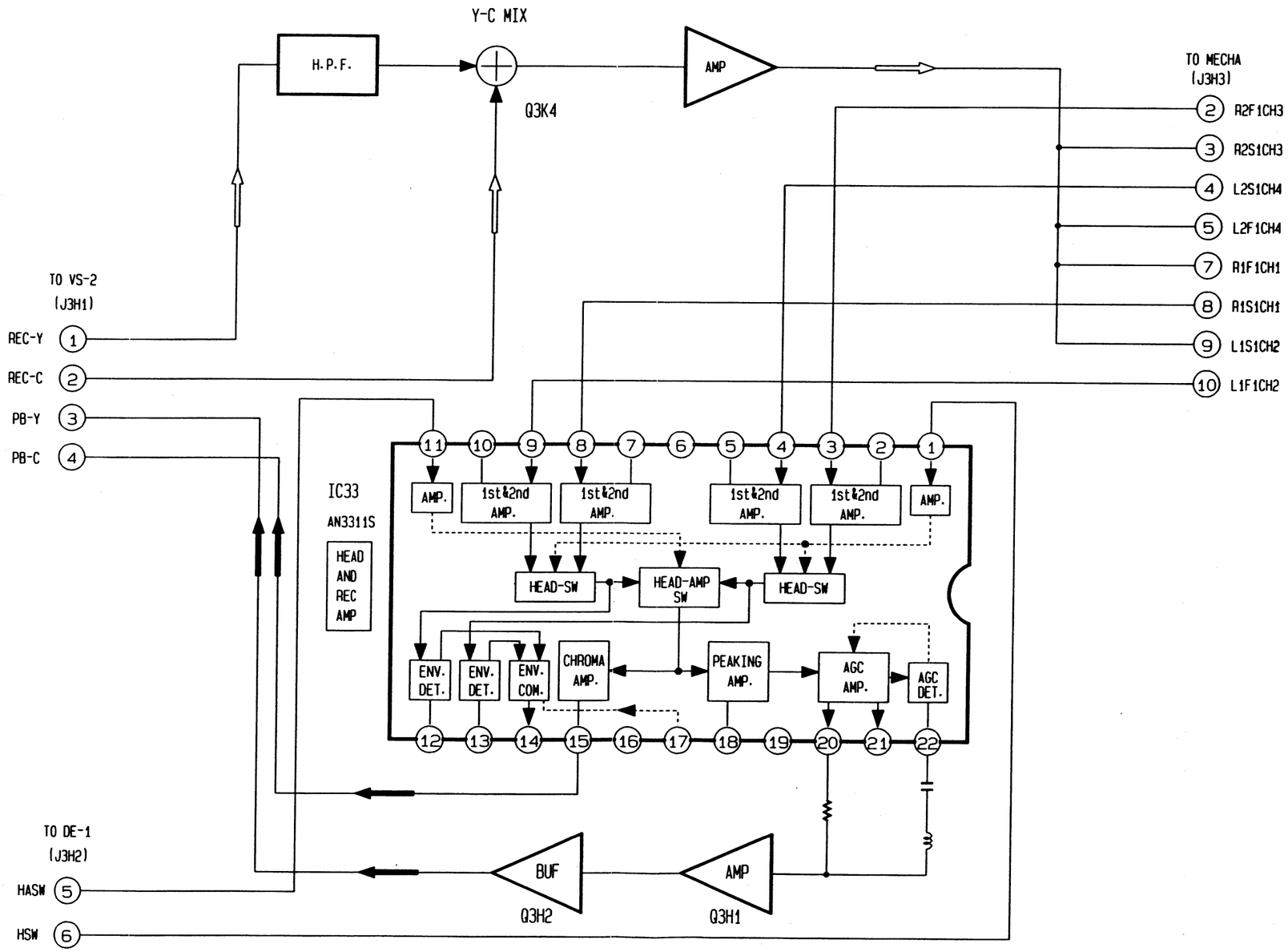

BLOCK DIAGRAM (IO)
(AUDIO/VIDEO SELECTOR BLOCK)

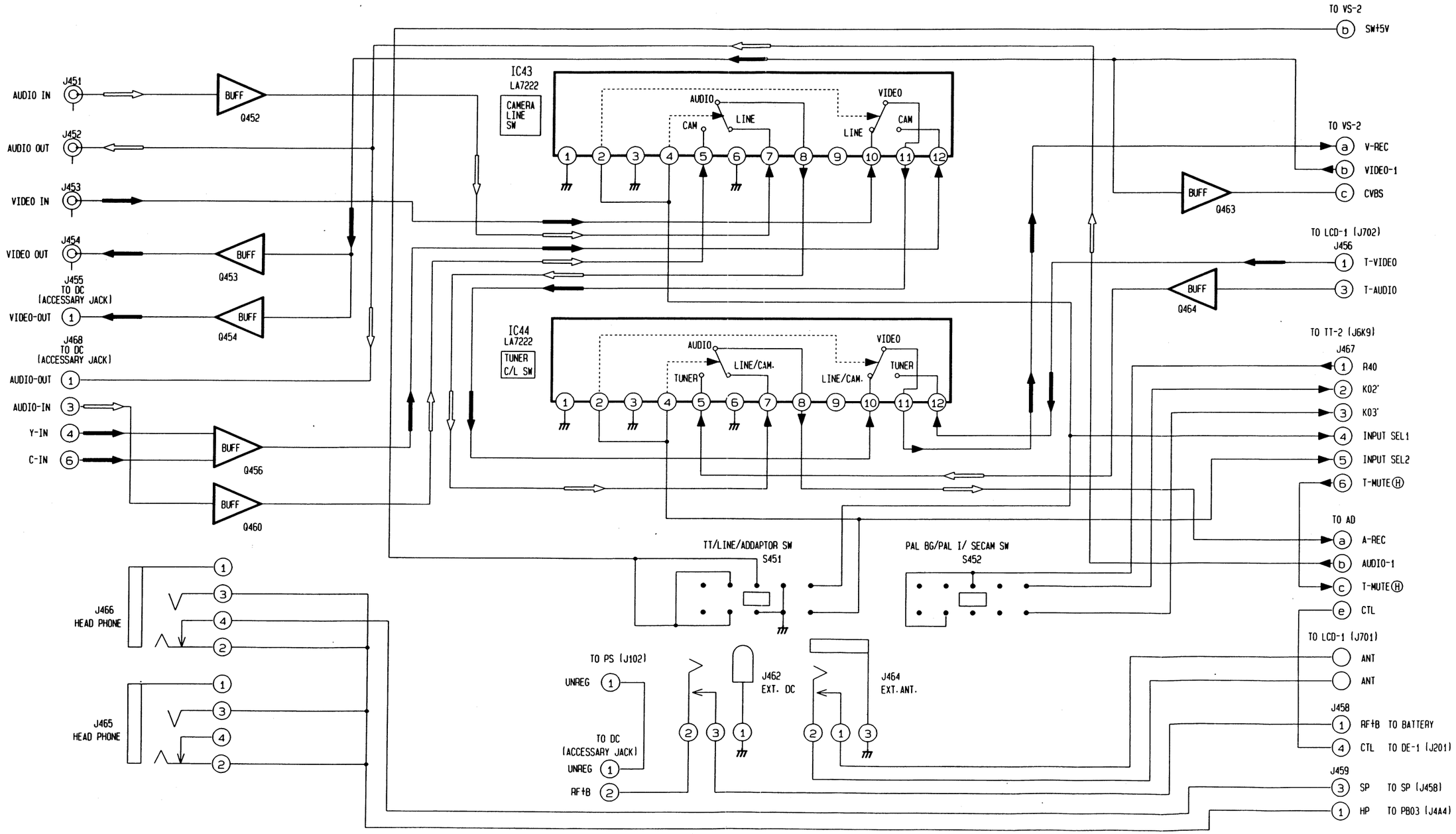

SERVO/DRIVE/SYSTEM CONTROL/VIDEO POWER SUPPLY P.C.B. DRAWING PD01

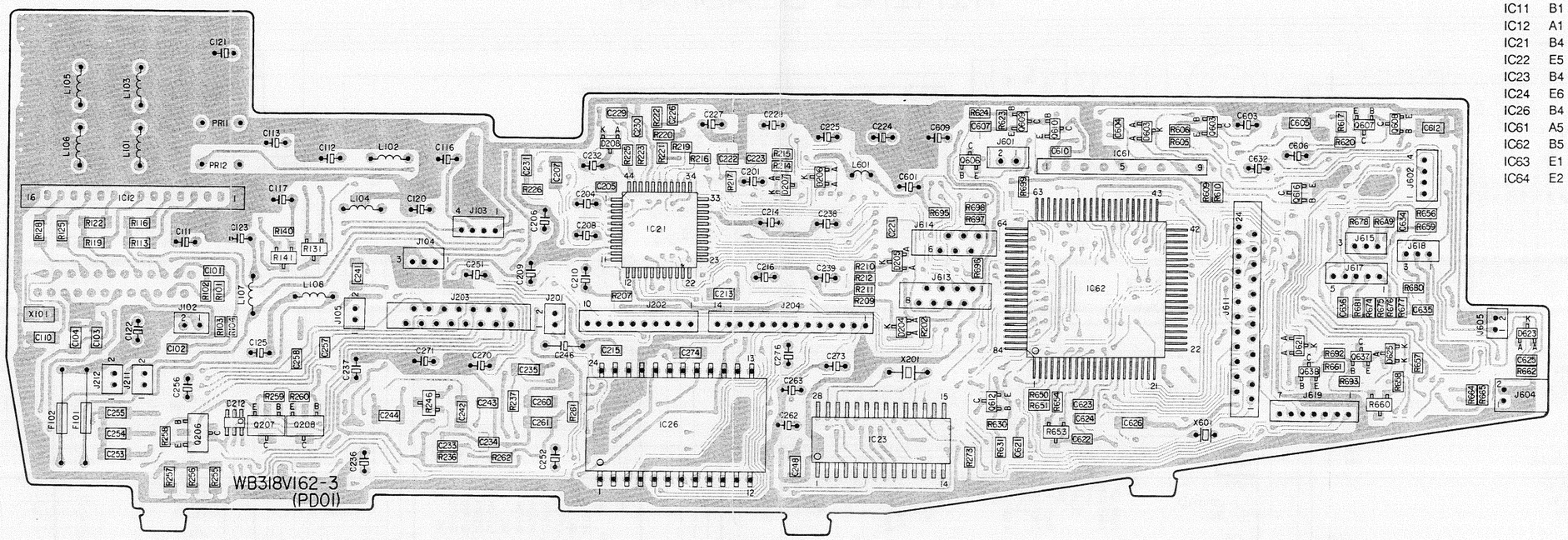

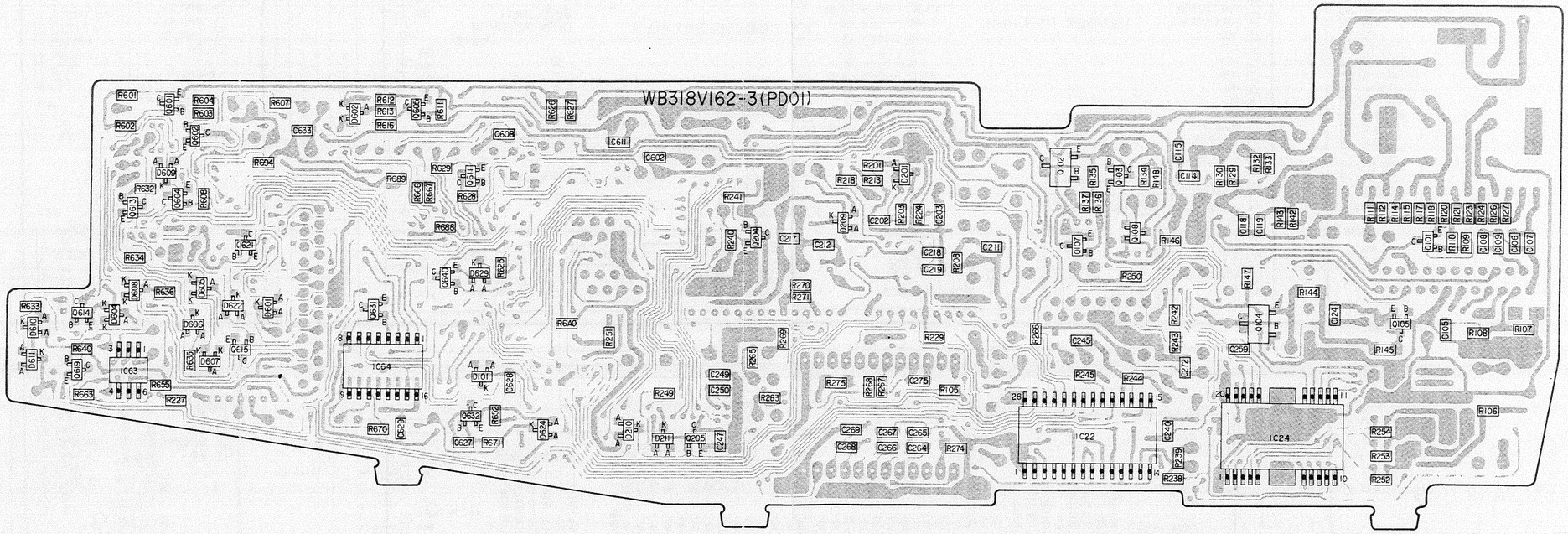

IC'S

IC11	B1
IC12	A1
IC21	B4
IC22	E5
IC23	B4
IC24	E6
IC26	B4
IC61	A5
IC62	B5
IC63	E1
IC64	E2

TRANSISTORS

Q101	D7
Q102	D5
Q103	D5
Q104	E6
Q105	E6
Q107	D5
Q204	D4
Q205	E4
Q206	B2
Q207	B2
Q208	B2
Q601	D2
Q602	D2
Q603	A6
Q604	D2
Q605	D3
Q606	A5
Q607	A6
Q608	A6
Q609	A5
Q610	A5
Q611	D3
Q612	B5
Q613	D1
Q614	E1
Q615	E2
Q616	A6
Q619	E1
Q621	D2
Q631	D2
Q632	E3
Q637	B6
Q638	B6
Q640	D3

DIODES

D101	E3
D201	D5
D204	B5
D205	B5
D206	A4
D207	A4
D208	A3
D209	D4
D210	E3
D211	E4
D212	B2
D601	D2
D602	D2
D603	A5
D604	E1
D605	D2
D606	E2
D607	E2
D608	D1
D609	D2
D610	E1
D611	E1
D621	B6
D622	D2
D623	B7
D624	E3
D625	B6
D629	D3

WIRING DIAGRAM

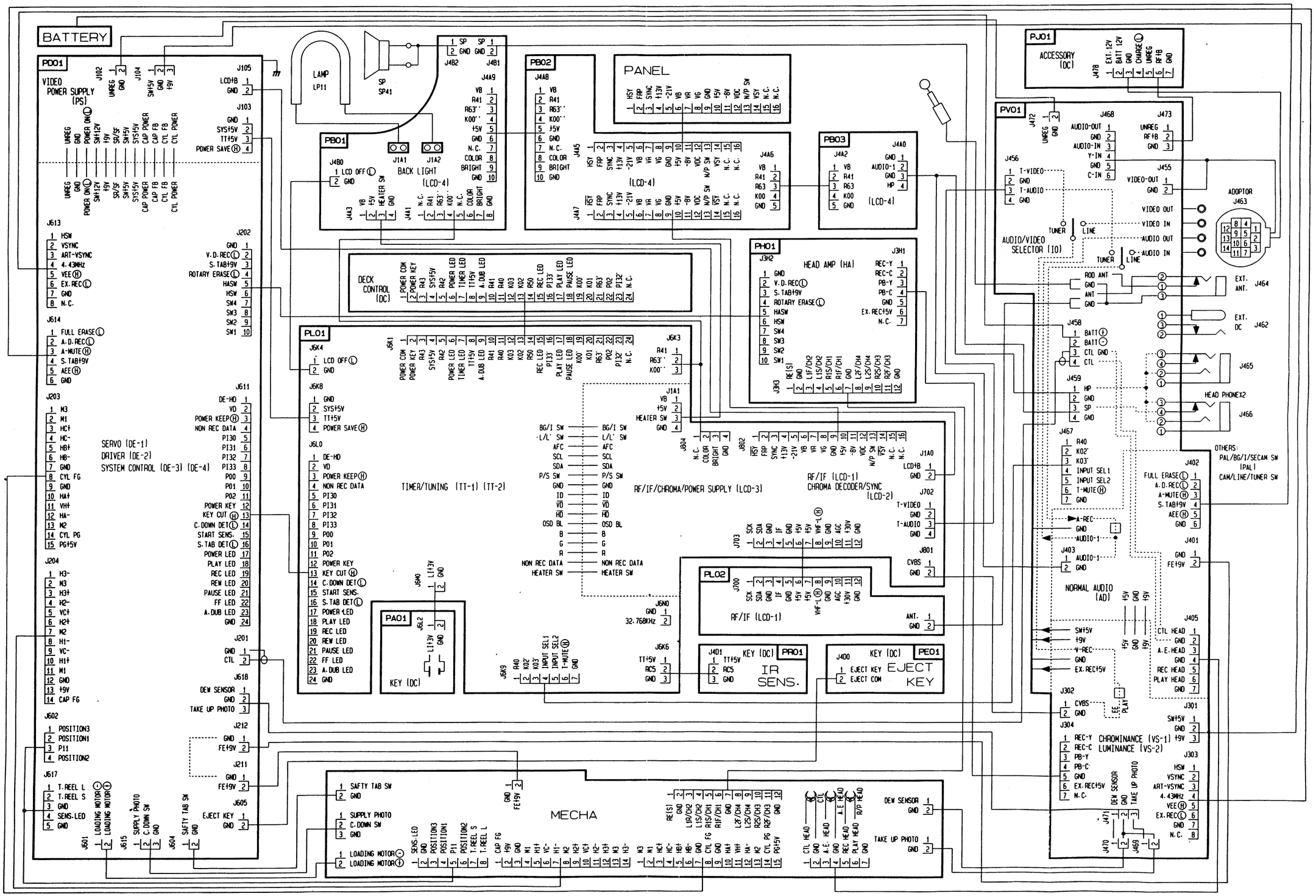

(PS)

CK)

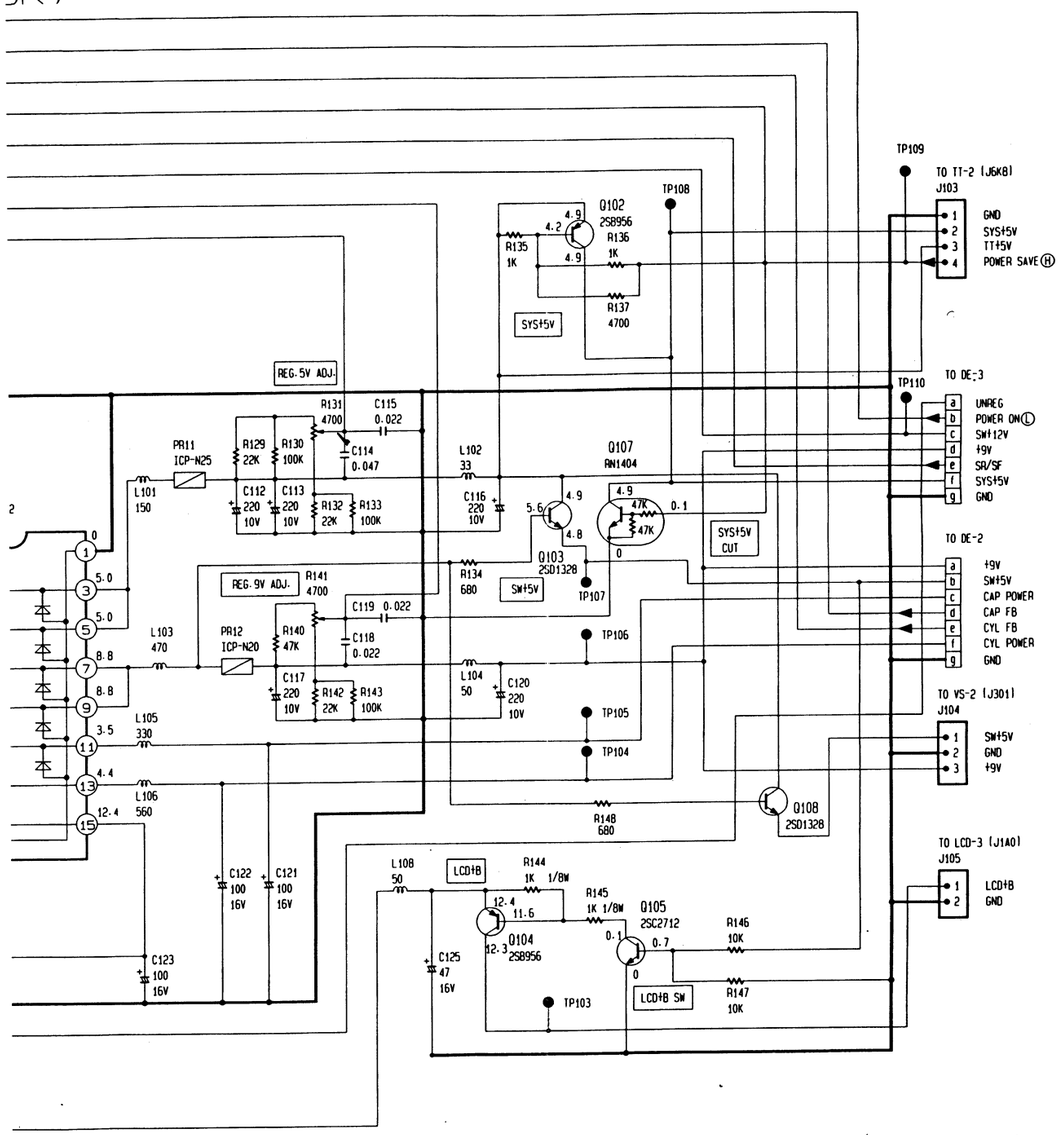

Q101 B3
Q102 B7
Q103 C7
Q104 D6
Q105 D7

IC11 B2
IC12 C4

D101 C1

TEST POINTS

TP101 D1
TP102 E2
TP103 E7
TP104 D7
TP105 D7
TP106 C7
TP107 C7
TP108 B7
TP109 B8
TP110 B8

	Q101			Q102			Q103			Q104			Q105		
	E	B	C	E	B	C	E	B	C	E	B	C	E	B	C
MODE															
REC	12.4	11.7	12.4	4.9	4.2	4.9	4.8	5.6	4.9	12.4	11.6	12.3	0	0.7	0.1
PLAY	12.5	11.8	12.4	4.9	4.2	4.9	4.8	5.6	4.9	12.4	11.6	12.3	0	0.7	0.1
STOP	12.6	11.9	12.5	4.9	4.2	4.9	4.8	5.6	4.9	12.5	11.7	12.4	0	0.7	0.1

	Q107		
	E	B	C
MODE			
REC	0	0.1	4.9
PLAY	0	0.1	4.9
STOP	0	0.1	4.9

SCHEMATIC DIAGRAM (PS)

(VIDEO POWER SUPPLY BLOCK)

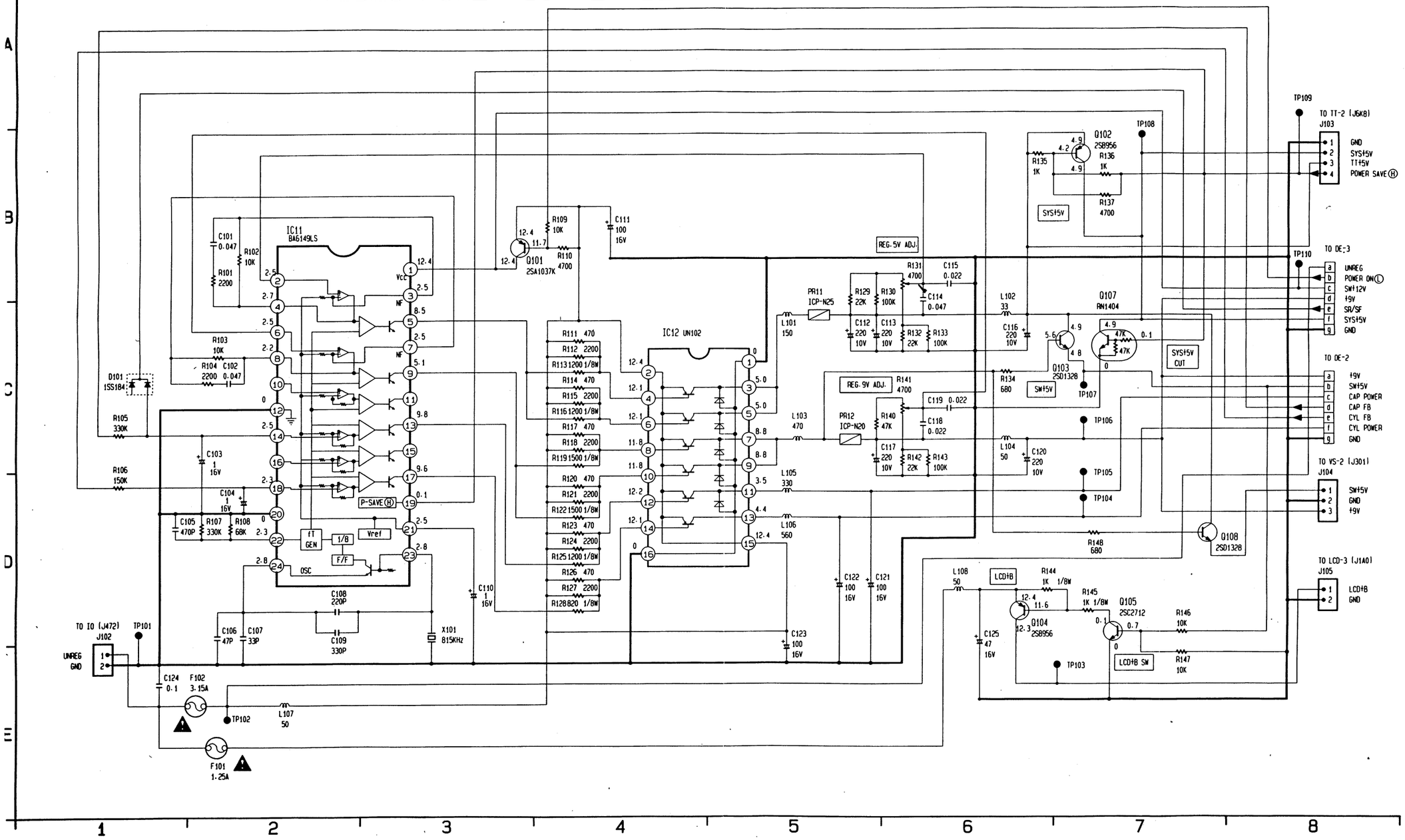

Q101	B3
Q102	B7
Q103	C7
Q104	D6
Q105	D7
IC11	B2
IC12	C4
D101	C1

TEST POINT

TP101	D1
TP102	E2
TP103	E7
TP104	D7
TP105	D7
TP106	C7
TP107	C7
TP108	B7
TP109	B8
TP110	B8

IC11 (BA6149LS)

	1	2	3	4	5	6	7	8	9	10	11	12	13	14
MODE														
REC	12.4	2.5	2.5	2.7	8.5	2.5	2.5	2.2	5.1	0	0	0	9.8	2.5
PLAY	12.4	2.5	2.5	2.7	8.5	2.5	2.5	2.2	5.3	0	0	0	9.9	2.5
STOP	12.5	2.5	2.5	2.7	8.7	2.5	2.5	2.2	5.5	0	0	0	0.7	0

	15	16	17	18	19	20	21	22	23	24
MODE										
REC	0.5	0	9.6	2.3	0.1	0	2.5	2.3	2.8	2.8
PLAY	0.5	0	9.6	2.3	0.1	0	2.5	2.3	2.8	2.8
STOP	0.5	0	12.5	0	0.1	0	0	2.3	2.8	2.8

IC12 (UN102)

	1	2	3	4	5	6	7	8	9	10	11	12	13	14
MODE														
REC	0	12.4	5.0	12.1	5.0	12.1	8.8	11.8	8.8	11.8	3.5	12.4	4.4	12.1
PLAY	0	12.5	5.0	12.1	5.0	12.1	8.7	11.9	8.7	11.9	3.6	12.2	4.4	12.2
STOP	0	12.5	5.0	12.2	5.0	12.2	8.7	12.0	8.7	12.0	12.5	11.8	2.9	12.5

	15	16
MODE		
REC	12.4	0
PLAY	12.5	0
STOP	12.5	0

	Q101			Q102			Q103			Q104			Q105		
	E	B	C	E	B	C	E	B	C	E	B	C	E	B	C
MODE															
REC	12.4	11.7	12.4	4.9	4.2	4.9	4.8	5.6	4.9	12.4	11.6	12.3	0	0.7	0.1
PLAY	12.5	11.8	12.4	4.9	4.2	4.9	4.8	5.6	4.9	12.4	11.6	12.3	0	0.7	0.1
STOP	12.6	11.9	12.5	4.9	4.2	4.9	4.8	5.6	4.9	12.5	11.7	12.4	0	0.7	0.1

	Q107		
	E	B	C
MODE			
REC	0	0.1	4.9
PLAY	0	0.1	4.9
STOP	0	0.1	4.9

1) (SERVO BLOCK)

CYLYNDER PHASE ◀ CAPSTAN PHASE

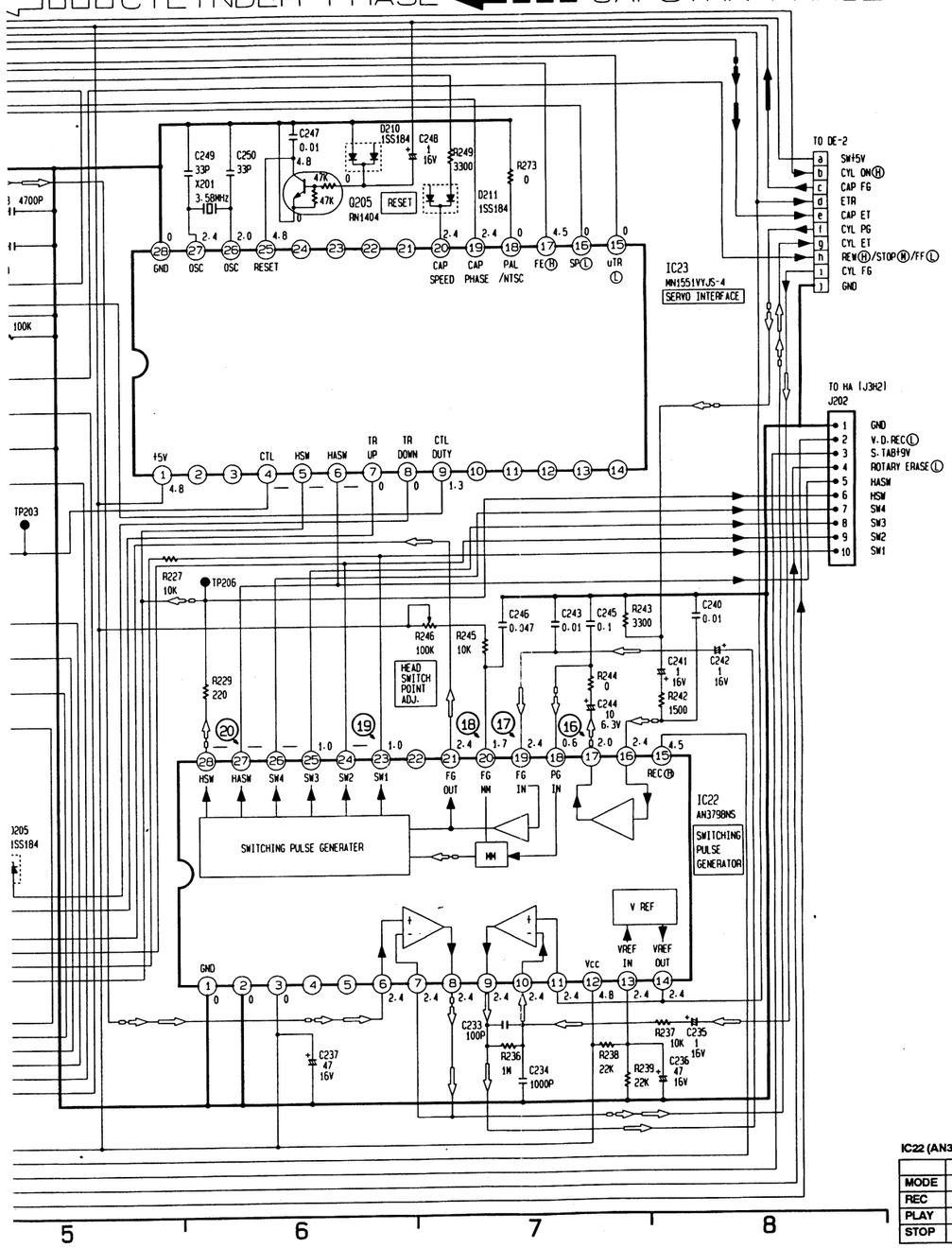

5 6 7 8

Q204	E3
Q205	B6

IC21	C3
IC22	E8
IC23	B8

D201	C2
D204	E5
D205	E5
D206	B5
D207	B4
D208	B3
D209	E2
D210	B6
D211	B7

TEST POINTS

TP201	C3
TP202	D2
TP203	C5
TP204	C4
TP205	B4
TP206	D6

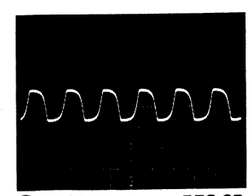

1 IC21 Pin 2 TP201 REC SP 0.5V/Div. 0.5ms/Div.

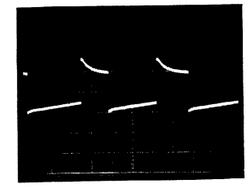

2 IC21 Pin 6 REC SP 2V/Div. 10ms/Div.

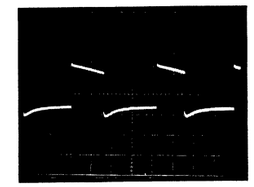

3 IC21 Pin 7 REC SP 2V/Div. 10ms/Div.

4 IC21 Pin 8 REC SP 2V/Div. 10ms/Div.

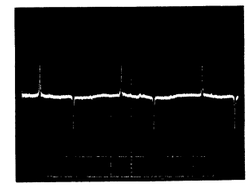

5 IC21 Pin 8 PB SP 2V/Div. 10ms/Div.

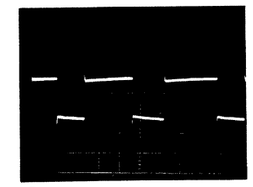

6 IC21 Pin 11 REC SP 2V/Div. 10ms/Div.

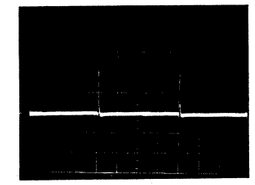

7 IC21 Pin 14 REC SP 0.5V/Div. 5ms/Div.

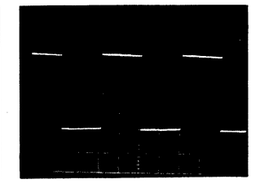

8 IC21 Pin 15 TP206 REC SP 1V/Div. 10ms/Div.

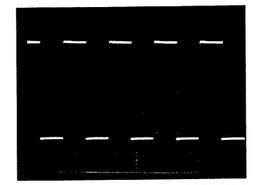

9 IC21 Pin 16 IC22 Pin 21 REC SP 1V/Div. 0.5ms/Div.

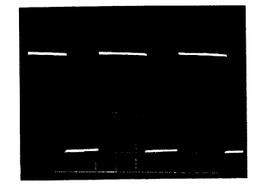

10 IC21 Pin 28 REC SP 1V/Div. 10ms/Div.

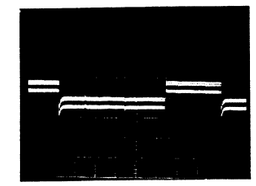

11 IC21 Pin 36 REC SP 0.2V/Div. 10ms/Div.

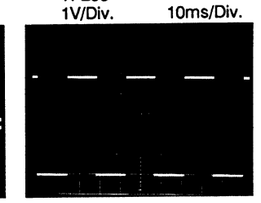

12 IC21 Pin 37 REC SP 1V/Div. 10µs/Div.

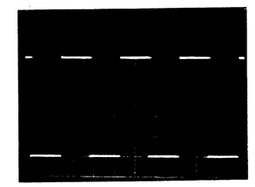

13 IC21 Pin 38 REC SP 1V/Div. 5µs/Div.

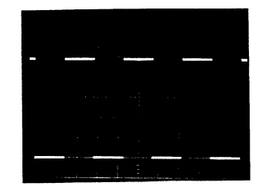

14 IC21 Pin 39 REC SP 1V/Div. 10µs/Div.

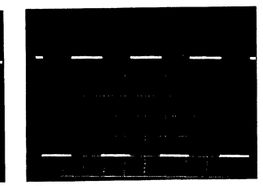

15 IC21 Pin 40 REC SP 1V/Div. 10µs/Div.

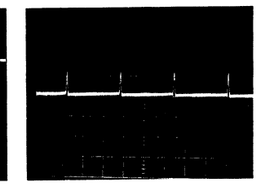

16 IC22 Pin 17 REC SP 0.5V/Div. 10ms/Div.

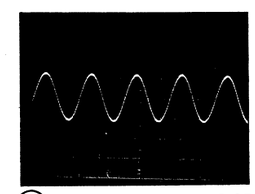

17 IC22 Pin 19 REC SP 0.5V/Div. 0.5ms/Div.

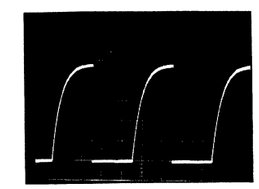

18 IC22 Pin 20 REC SP 1V/Div. 5ms/Div.

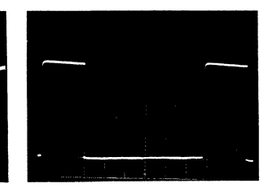

19 IC22 Pin 23 1V/Div. 10ms/Div

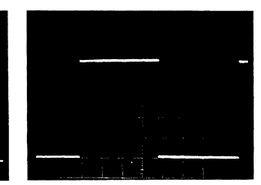

20 IC22 Pin 27 REC SP 1V/Div. 10ms/Div.

IC22 (AN3798NS)

	1	2	3	4	5	6	7	8	9	10	11	12	13	14
MODE														
REC	0	0	0	0	0	2.4	2.4	2.4	2.4	2.4	2.4	4.8	2.4	2.4
PLAY	0	0	0	0	0	2.4	2.4	2.4	2.4	2.4	2.4	4.8	2.4	2.4
STOP	0	0	4.8	0	0	3.8	3.9	–	2.4	2.4	2.4	4.8	2.4	2.4

IC23 (MN1551YJS-4)

	1	2	3	4	5	6	7	8	9	10	11	12	13	14
MODE														
REC	4.8	4.8	4.8	–	–	–	0	0	1.3	4.8	–	1.0	1.0	0
PLAY	4.8	4.8	4.8	–	–	0.7	0	0	0	4.8	2.1	2.1	2.1	2.1
STOP	4.8	0	0	4.8	0	0	0	0	0	4.8	0	0	0	0

	Q204			Q205		
	E	B	C	E	B	C
MODE						
REC	2.4	–	–	0	0	4.8
PLAY	2.4	2.0	2.4	0	0	4.8
STOP	2.4	1.8	2.4	0	0	4.8

	27	28
	2.4	–
	2.4	–
	–	0

	29	30	31	32	33	34	35	36	37	38	39	40	41	42
MODE														
REC	4.8	2.4	0	0	0	0	0	–	2.4	2.4	2.4	2.5	0.	2.3
PLAY	4.8	2.4	0	0	0	0	0	0	2.4	2.4	2.4	2.6	0	2.4
STOP	4.8	0	0	0	2.1	0	0	0	–	–	0	2.4	0	0.9

	43	44
MODE		
REC	2.4	2.4
PLAY	2.4	2.4
STOP	1.4	0.3

	15	16	17	18	19	20	21	22	23	24	25	26	27	28
MODE														
REC	4.5	2.4	2.0	0.6	2.4	1.7	2.4	0	1.0	–	1.0	–	–	–
PLAY	0.2	2.4	2.0	0.6	2.4	1.7	2.4	–	1.0	–	1.0	1.0	0	–
STOP	4.5	2.4	2.0	0.7	2.4	1.1	–	4.8	–	–	–	–	–	–

	15	16	17	18	19	20	21	22	23	24	25	26	27	28
MODE														
REC	0	0	4.5	0	2.4	2.4	0.6	0	4.8	4.8	4.8	2.0	2.4	0
PLAY	4.8	0	0	0	2.4	2.3	0	0	4.8	4.8	4.8	2.0	2.4	0
STOP	4.8	0	0	0	0.9	2.0	0	0	4.8	4.8	4.8	2.0	2.4	0

SCHEMATIC DIAGRAM (DE-1) (SERVO BLOCK)

CYLYNDER SPEED ◀ CAPSTAN SPEED ◀ CYLYNDER PHASE ◀ CAPSTAN PHASE

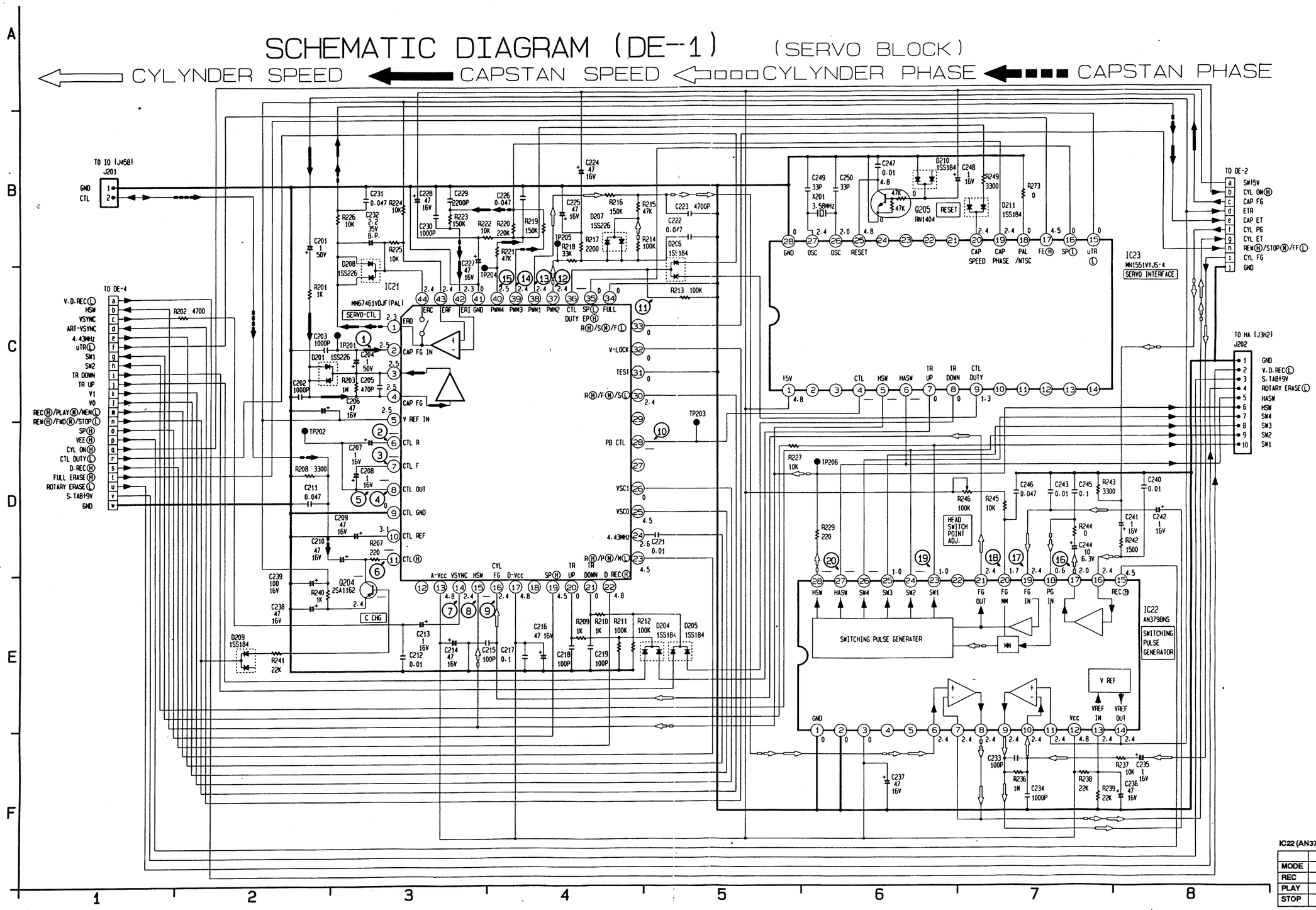

Q204 E3
Q205 B6

IC21 C3
IC22 E8
IC23 B8

D201 C2
D204 E5
D205 E5
D206 B5
D207 B4
D208 B3
D209 E2
D210 B6
D211 B7

TEST POINTS

TP201 C3
TP202 D2
TP203 C5
TP204 C4
TP205 B4
TP206 D6

IC21 (MN67461VDJF)

	1	2	3	4	5	6	7	8	9	10	11	12	13	14
MODE														
REC	2.3	2.5	2.5	2.5	2.5	–	–	–	0	3.1	–	0.6	4.8	2.4
PLAY	2.3	2.4	2.4	2.4	2.4	2.5	1.9	2.4	0	2.4	2.4	0	4.8	2.4
STOP	0.1	2.5	2.5	2.5	2.5	2.9	1.6	2.9	0	2.4	2.4	0	4.8	2.4

	15	16	17	18	19	20	21	22	23	24	25	26	27	28
MODE														
REC	–	2.4	4.8	0.8	4.5	0	0	4.8	4.5	2.6	4.5	0	2.4	–
PLAY	–	2.3	4.8	0.4	4.5	0	0	0	2.4	2.6	4.5	0	2.4	–
STOP	–	–	4.8	0	4.6	0	0	0	0	2.6	4.6	0	–	0

	29	30	31	32	33	34	35	36	37	38	39	40	41	42
MODE														
REC	4.8	2.4	0	0	0	0	0	–	2.4	2.4	2.4	2.5	0.	2.3
PLAY	4.8	2.4	0	0	0	0	0	0	2.4	2.4	2.4	2.6	0	2.4
STOP	4.8	0	0	0	2.1	0	0	0	–	–	0	2.4	0	0.9

	43	44
MODE		
REC	2.4	2.4
PLAY	2.4	2.4
STOP	1.4	0.3

IC22 (AN3798NS)

	1	2	3	4	5	6	7
MODE							
REC	0	0	0	0	0	2.4	2.4
PLAY	0	0	0	0	0	2.4	2.4
STOP	0	0	4.8	0	0	3.8	3.9

	15	16	17	18	19	20	21
MODE							
REC	4.5	2.4	2.0	0.6	2.4	1.7	2.4
PLAY	0.2	2.4	2.0	0.6	2.4	1.7	2.4
STOP	4.5	2.4	2.0	0.7	2.4	1.1	–

SCHEMATIC DIAGRAM (DE-3)
(SYSTEM CONTROL BLOCK)

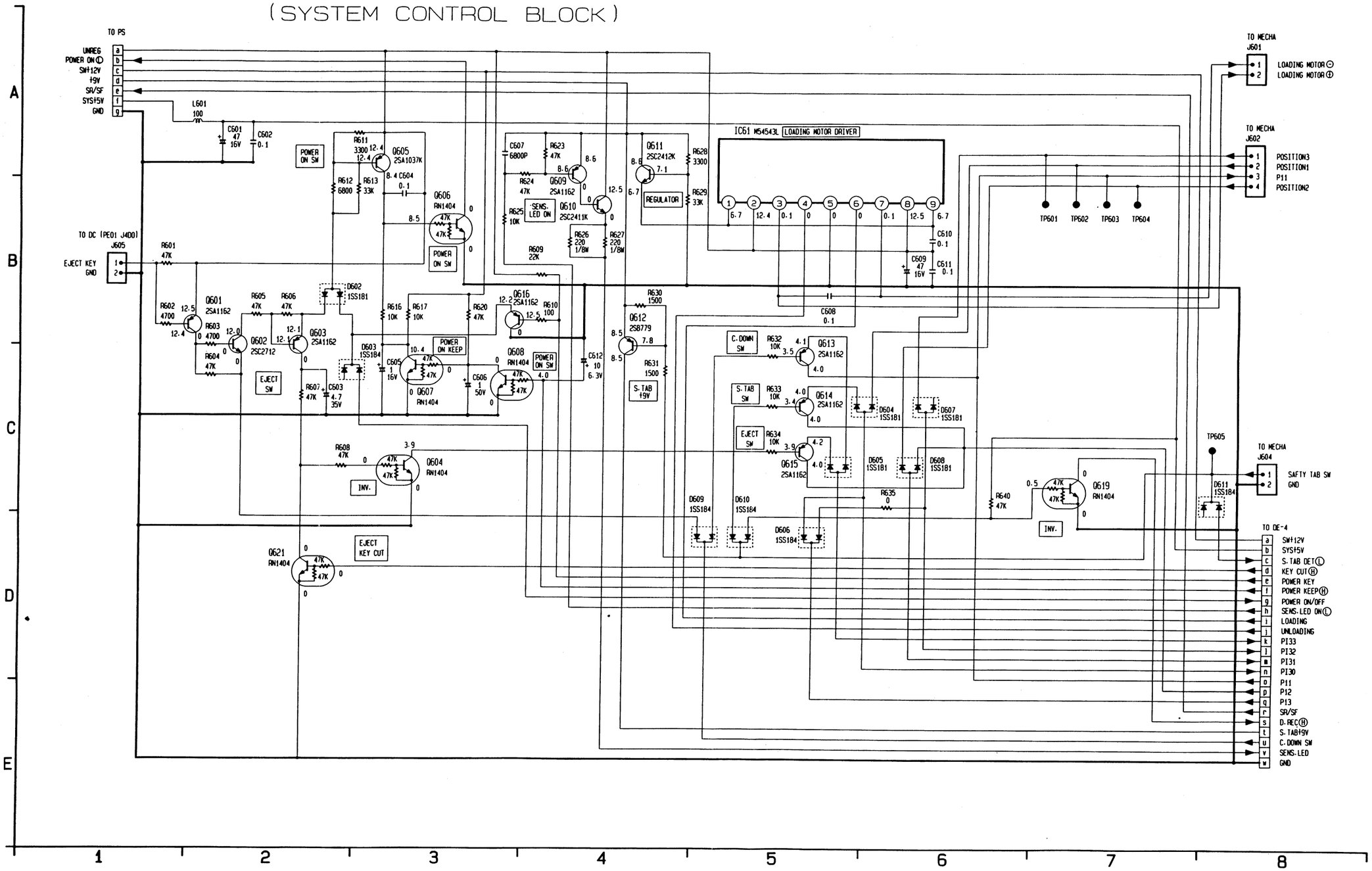

Q601	B2
Q602	B2
Q603	B2
Q604	C3
Q605	A3
Q606	B3
Q607	C3
Q608	C3
Q609	B4
Q610	B4
Q611	A4
Q612	B4
Q613	B5
Q614	C5
Q615	C5
Q616	B3
Q619	C7
Q621	D2

IC61	A5

D602	B2
D603	C2
D604	C6
D605	C6
D606	D5
D607	C6
D608	C6
D609	D4
D610	D5
D611	C8

TEST POINTS

TP601	B7
TP602	B7
TP603	B7
TP604	B7
TP605	C8

IC61 (M54543L)

	1	2	3	4	5	6	7	8	9
MODE									
REC	6.7	12.4	0.1	0	0	0	0.1	12.5	6.7
PLAY	6.7	12.5	0.1	0	0	0	0.1	12.5	6.7
STOP	6.7	12.6	0	0	0	0	0	12.6	6.7

	Q611			Q612			Q613			Q614			Q615		
	E	B	C	E	B	C	E	B	C	E	B	C	E	B	C
MODE															
REC	6.7	7.1	8.6	8.5	7.8	8.5	4.1	3.5	4.0	4.0	3.4	4.0	4.2	3.9	4.0
PLAY	6.7	7.1	8.6	8.6	7.9	8.6	4.1	3.5	4.0	4.0	3.4	4.0	4.2	3.9	4.0
STOP	6.7	7.1	8.6	8.6	7.9	8.6	4.1	3.5	4.0	4.0	3.4	4.0	4.2	3.9	4.0

	Q616			Q619			Q621		
	E	B	C	E	B	C	E	B	C
MODE									
REC	12.2	12.5	0	0	0.5	0	0	0	0
PLAY	12.2	12.5	0	0	0.5	0	0	0	0
STOP	12.3	12.6	0	0	0.5	0	0	0	0

	Q601			Q602			Q603			Q604			Q605		
	E	B	C	E	B	C	E	B	C	E	B	C	E	B	C
MODE															
REC	12.5	12.4	0	0	0	12.0	12.1	12.1	0	0	0	3.9	12.4	12.4	8.4
PLAY	12.5	12.4	0	0	0	12.1	12.2	12.1	0	0	0	3.9	12.6	12.6	8.6
STOP	12.6	12.5	0	0	0	12.1	12.3	12.2	0	0	0	3.9	12.6	12.6	8.6

	Q606			Q607			Q608			Q609			Q610		
	E	B	C	E	B	C	E	B	C	E	B	C	E	B	C
MODE															
REC	0	8.5	0	0	0	10.4	0	4.0	0	8.6	8.6	0	0	0	12.5
PLAY	0	8.5	0	0	0	10.4	0	4.0	0	8.6	8.6	–	0	0	12.5
STOP	0	8.6	0	0	0	10.5	0	4.0	0	8.6	8.6	–	0	0	12.6

SCHEMATIC DIAGRAM (DE-2)
(DRIVER BLOCK)

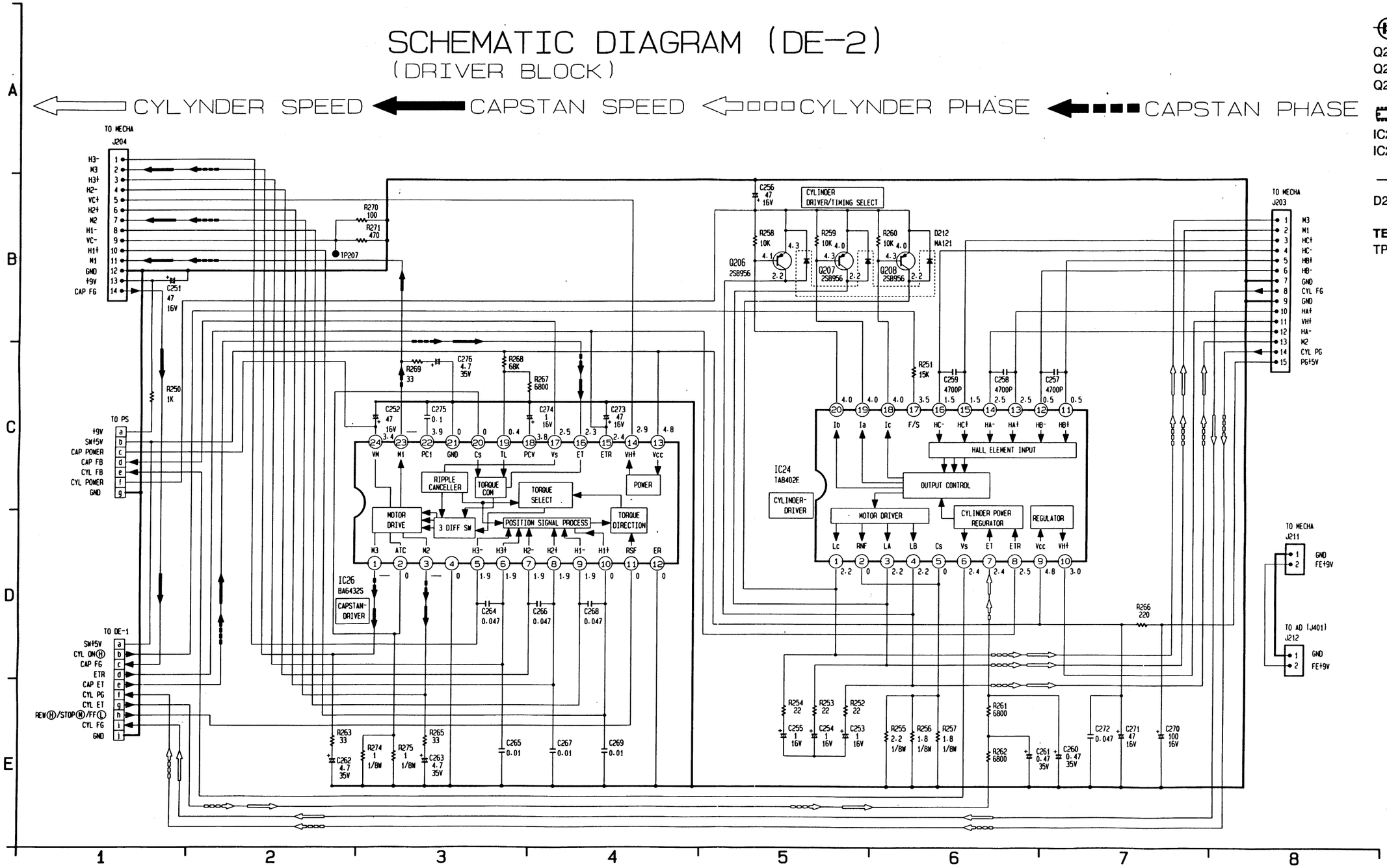

Q206 B5
Q207 B5
Q208 B6

IC24 C5
IC26 D2

D212 B6

TEST POINT
TP207 B2

IC24 (TAB402F)

	1	2	3	4	5	6	7	8	9	10	11	12	13	14
MODE														
REC	2.2	0	2.2	2.2	0	2.4	2.4	2.5	4.8	3.0	0.5	0.5	2.5	2.5
PLAY	2.2	0	2.2	2.2	0	2.4	2.4	2.4	4.8	3.0	0.5	0.5	2.5	2.5
STOP	0.1	0	0.1	0.1	0	0	4.0	2.5	4.8	0	0	0	0	0

	15	16	17	18	19	20
MODE						
REC	1.5	1.5	3.5	4.0	4.0	4.0
PLAY	1.5	1.5	3.5	4.0	4.0	4.0
STOP	0	0	2.5	2.2	2.2	2.2

IC26 (BA6432S)

	1	2	3	4	5	6	7	8	9	10	11	12	13	14
MODE														
REC	–	0	–	0	1.9	1.9	1.9	1.9	1.9	0	0	0	4.8	2.9
PLAY	–	0	–	0	1.9	1.9	1.9	1.9	1.9	0	0	0	4.8	3.0
STOP	2.5	0	2.5	0	1.9	1.9	1.9	1.9	1.9	1.9	2.1	0	4.8	3.0

	15	16	17	18	19	20	21	22	23	24
MODE										
REC	2.4	2.3	2.5	3.8	0.4	0	0	3.9	–	3.4
PLAY	2.4	2.3	2.5	3.8	0.4	0	0	3.9	–	3.4
STOP	2.5	0.1	0	3.8	0.4	0	0	0	2.7	12.5

	Q206			207			Q208		
	E	B	C	E	B	C	E	B	C
MODE									
REC	4.3	4.1	2.2	4.0	4.3	2.2	4.0	4.3	2.2
PLAY	4.3	4.0	2.2	4.0	4.3	2.2	4.0	4.3	2.2
STOP	2.0	2.0	0.2	1.9	1.9	0.3	1.9	1.9	0.3

IF/CHROMA DECODER/SYNC/TIMER/TUNING/RF, IF, CHROMA POWER SUPPLY P.C.B. DRAWING PL01

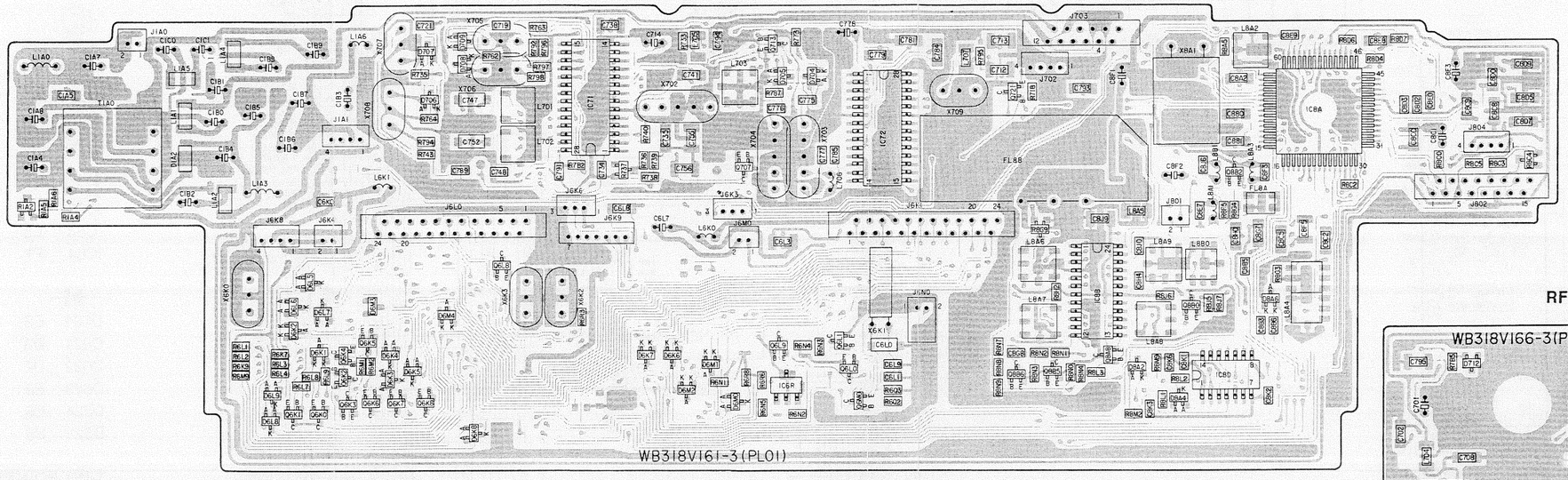

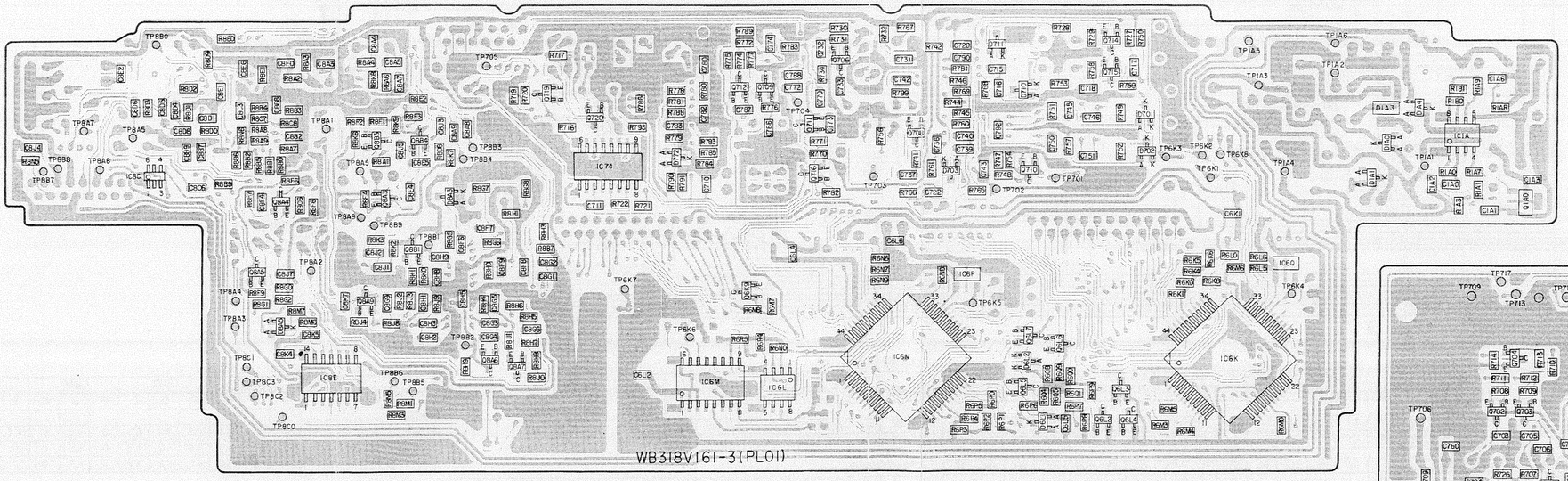

TRANSISTORS

Q1A0	D6	Q701	D7	Q8A7	E3
Q6K0	B2	Q702	E6	Q8A8	B5
Q6K1	B2	Q703	E6	Q8A9	D2
Q6K2	B2	Q704	E6	Q8B0	B5
Q6K3	B2	Q705	E6	Q8B1	D2
Q6K4	B2	Q706	D4	Q8B2	B5
Q6K5	B2	Q707	B3	Q8B3	D2
Q6K6	B2	Q708	A2	Q8B4	D2
Q6K7	B2	Q709	D3	Q8B5	B5
Q6K8	B2	Q710	D4	Q8B6	B4
Q6K9	D3	Q711	D4		
Q6L0	B4	Q712	D3		
Q6L1	B4	Q713	A3		
Q6L2	E5	Q714	C5		
Q6L3	E5	Q715	D5		
Q6L4	E5	Q716	D4		
Q6L5	E4	Q719	D3		
Q6L6	E5	Q720	D3		
Q6L7	E4	Q721	A4		
Q6L8	B2	Q8A3	D2		
Q6L9	B4	Q8A4	D2		
Q6M0	B4	Q8A5	D2		
Q700	E6	Q8A6	E2		

IC'S

IC1A	D6
IC6K	E5
IC6L	E4
IC6M	E3
IC6N	E4
IC6P	D4
IC6Q	D5
IC6R	B4
IC71	A3
IC72	A4
IC73	E7
IC74	D3
IC8A	A5
IC8B	B5
IC8C	D1
IC8D	B5
IC8E	E2

RF P.C.B. DRAWING PL02

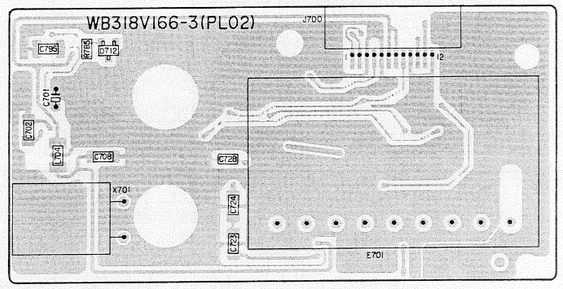

DIODES

D1A0	D6	D6L6	B2	D708	A2
D1A1	D6	D6L7	B2	D709	A2
D1A2	A1	D6L8	B2	D710	D4
D1A3	D6	D6L9	B2	D711	D4
D1A4	D6	D6M0	B3	D772	D3
D6K1	B2	D6M1	B3	D8A2	B5
D6K2	B2	D6M2	B3	D8A3	D2
D6K3	B2	D6M3	B2	D8A4	B5
D6K4	B2	D6M4	B2	D8A5	E2
D6K5	B2	D701	D5	D8A6	B5
D6K6	B3	D702	D5		
D6K7	B3	D703	D4		
D6K8	C2	D704	A4		
D6L1	E5	D705	A4		
D6L2	E4	D706	A2		
D6L5	B2	D707	A2		

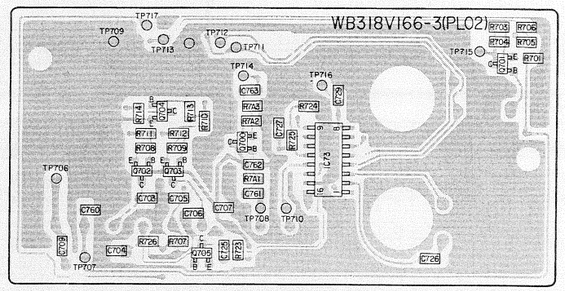

SCHEMATIC DIAGRAM (DE-4) (SYSTEM CONTROL BLOCK)

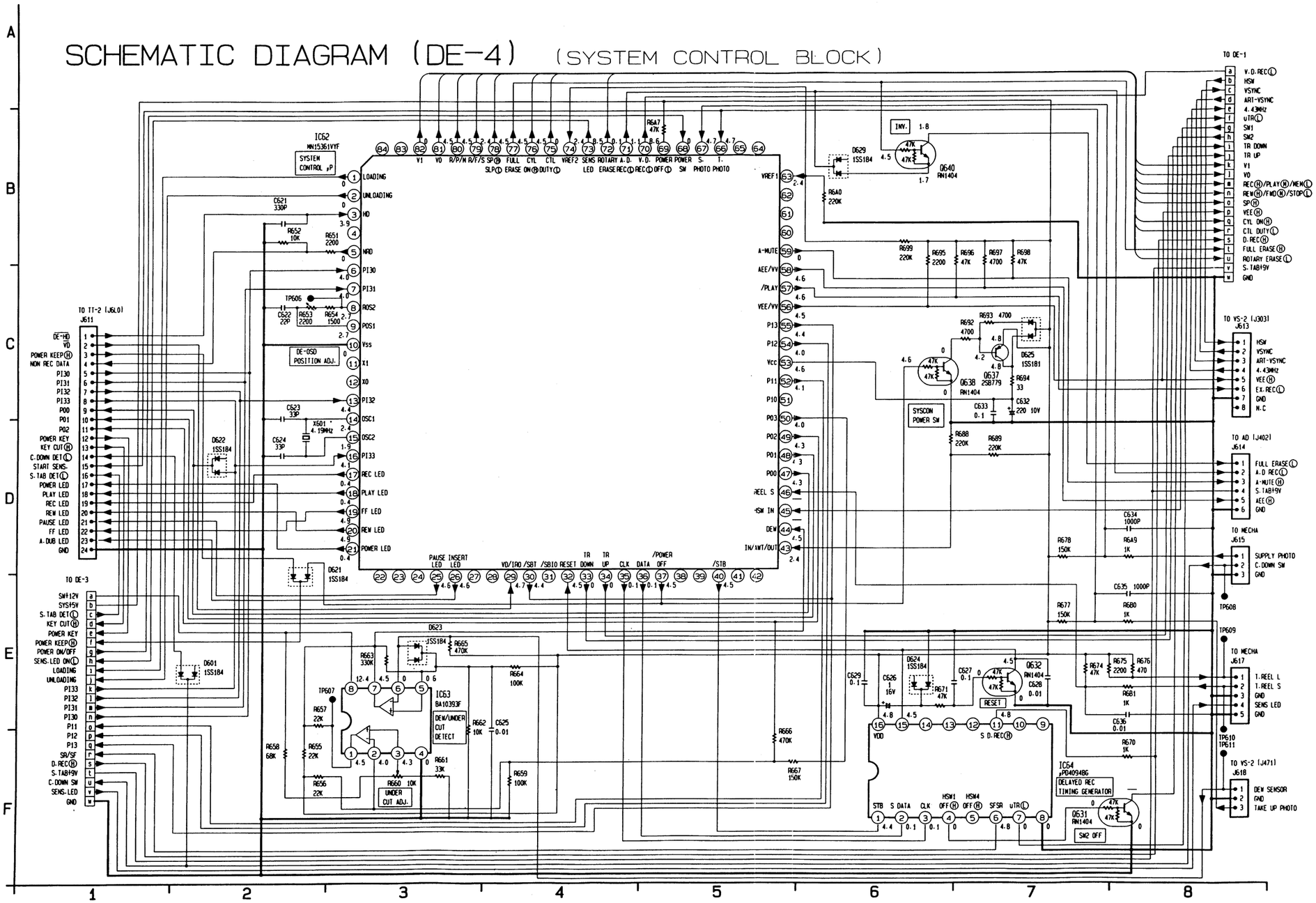

Q631 F7
Q632 E7
Q637 C7
Q638 C7
Q640 B6

IC62 B2
IC63 E3
IC64 F7

D601 E2
D621 D3
D622 D2
D623 E3
D624 E6
D629 B6

TEST POINTS

TP606 C2
TP607 E3
TP608 E8
TP609 E8
TP610 F8
TP611 F8

IC62 (MN15361VYF)

	1	2	3	4	5	6	7	8	9	10	11	12	13	14
MODE														
REC	0	0	3.9	0	0	4.0	4.0	2.7	2.7	0	0	4.5	4.4	2.4
PLAY	0	0	3.9	0	0	4.0	0	0	0	0	0	–	2.7	4.5
STOP	0	0	3.9	0	0	4.0	4.1	2.7	2.7	0	0	4.6	4.1	2.4

	15	16	17	18	19	20	21	22	23	24	25	26	27	28
MODE														
REC	1.9	4.1	0.4	0.4	4.9	4.9	0.4	0	0	0.2	4.6	4.6	3.4	4.5
PLAY	1.9	4.1	4.6	0.4	4.9	4.9	0.4	0	0	0	4.6	4.6	3.4	4.5
STOP	1.9	4.1	4.6	4.6	4.9	0	0.4	0	0	2.2	4.8	4.6	3.5	4.6

	29	30	31	32	33	34	35	36	37	38	39	40	41	42
MODE														
REC	4.7	4.4	1.2	4.5	0	0	0.1	0.1	4.5	0.1	0.1	4.5	0	0
PLAY	4.7	4.4	0	4.5	0	0	0.1	0.1	4.5	0.1	0.1	4.3	0	0
STOP	4.7	4.4	0	4.6	0	0	0	0	4.5	0	0	4.4	0	0

	43	44	45	46	47	48	49	50	51	52	53	54	55	56
MODE														
REC	2.4	4.5	–	–	4.3	4.3	4.3	4.0	4.1	4.1	4.6	4.0	4.4	4.5
PLAY	2.4	4.5	–	–	4.3	4.3	4.3	4.3	4.1	4.1	4.6	0	4.4	0.2
STOP	2.4	4.6	–	0.3	4.3	4.3	4.4	4.4	4.1	4.1	4.6	4.0	4.4	4.5

	57	58	59	60	61	62	63	64	65	66	67	68	69	70
MODE														
REC	4.6	4.6	0	0	0	0	2.4	0	0	4.7	4.7	0	–	8.6
PLAY	0.1	0.1	0	0	0	4.6	2.4	0	0	4.7	4.7	0.2	0	8.6
STOP	4.6	4.6	0	0	0	4.6	2.4	0	0	0	4.7	0	0	0

	71	72	73	74	75	76	77	78	79	80	81	82	83	84
MODE														
REC	1.1	0.1	8.5	2.4	0	4.5	4.5	4.5	2.4	4.5	4.5	0	0	0
PLAY	0	8.6	8.5	2.4	0	4.5	0	4.5	2.4	2.4	4.5	0	0	0
STOP	0	0	0	0	0	0	0	4.6	0	4.6	4.6	0	0	0

IC63 (BA10393E)

	1	2	3	4	5	6	7	8
MODE								
REC	4.5	4.0	4.3	0	0.6	0	4.5	12.4
PLAY	4.5	4.0	4.3	0	0.6	0	4.5	12.4
STOP	4.5	4.0	4.3	0	0.6	0	4.5	12.5

IC64 (μPD4094)

	1	2	3	4	5	6	7	8	9	10	11	12	13	14
MODE														
REC	4.4	0.1	0.1	0	0	4.8	0	0	4.8	4.8	4.8	0	0	4.8
PLAY	4.4	0.1	0.1	0	0	4.8	4.8	0	0.1	0.1	0	0	4.8	0
STOP	4.4	0.1	0.1	0	0	4.8	4.8	0	0.1	0.1	0	0	4.8	4.8

	15	16
MODE		
REC	4.5	4.8
PLAY	4.5	4.8
STOP	4.5	4.8

	Q631			Q632			Q637			Q638			Q640		
	E	B	C	E	B	C	E	B	C	E	B	C	E	B	C
MODE															
REC	0	0	–	0	0	4.5	4.8	4.2	4.8	0	4.6	0	1.7	4.5	1.8
PLAY	0	0	–	0	0	4.5	4.8	4.2	4.8	0	4.6	0	0	0	0
STOP	0	0	–	0	0	4.5	4.9	4.2	4.9	0	4.7	0	0	0	0

SCHEMATIC DIAGRAM (TT-2) (TIMER/TUNING BLOCK)

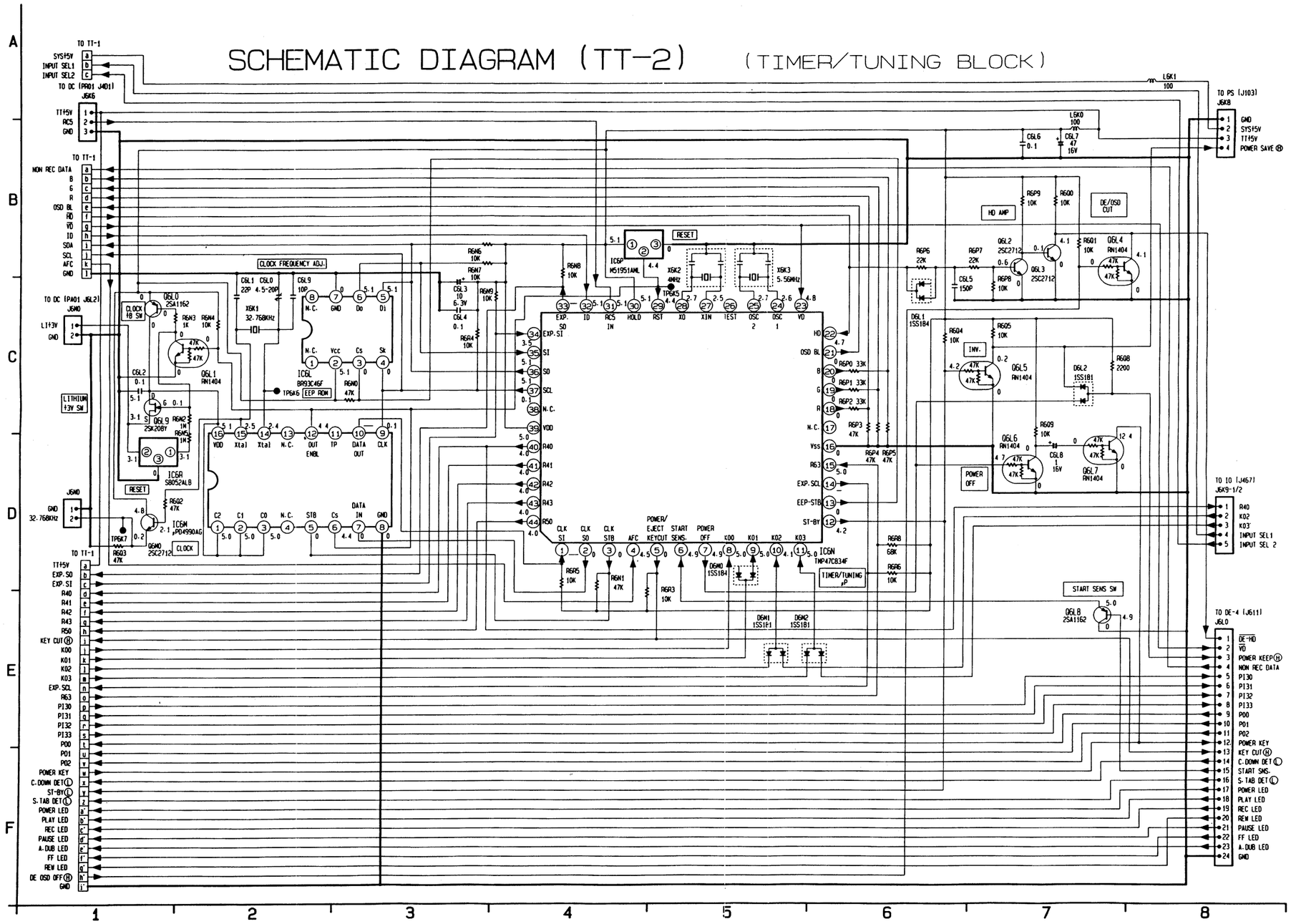

Q6L0 C1
Q6L1 C2
Q6L2 B7
Q6L3 C7
Q6L4 B7
Q6L5 C7
Q6L6 C7
Q6L7 D7
Q6L8 E7
Q6L9 C1
Q6M0 D1

IC6M D2
IC6N D6

D6L1 C6
D6L2 C7
D6M0 D5
D6M1 E5
D6M2 E5

TEST POINTS
TP6K5 C5
TP6K6 C2
TP6K7 D1

IC6L (BR93C46F)

	1	2	3	4	5	6	7	8
MODE								
REC	0	5.1	0	0	5.1	5.1	0	0
PLAY	0	5.1	0	0.1	5.1	5.1	0	0
STOP	0	5.1	0	0.1	5.1	5.1	0	0

IC6M (μPD4990A6)

	1	2	3	4	5	6	7	8	9	10	11	12	13	14
MODE														
REC	5.0	5.0	5.0	0	0	4.4	0	0	0.1	–	0	4.4	0	2.4
PLAY	5.1	5.1	5.1	0	0	4.4	0	0	0.1	–	0	4.4	0	2.4
STOP	5.1	5.1	5.1	0	0	4.4	0	0	0.1	0	0	4.4	0	2.4

	15	16
MODE		
REC	2.5	5.1
PLAY	2.5	5.1
STOP	2.5	5.1

IC6N (TMP47C834F)

	1	2	3	4	5	6	7	8	9	10	11	12	13	14
MODE														
REC	–	0	0	4.5	0	4.9	4.9	5.0	5.0	4.1	5.0	4.2	0	–
PLAY	–	0	0	4.5	0	4.9	4.9	5.0	5.0	4.1	5.0	4.2	0	–
STOP	–	0	0	4.5	0	5.1	4.7	5.0	5.0	–	5.0	4.2	0	–

	15	16	17	18	19	20	21	22	23	24	25	26	27	28
MODE														
REC	5.0	0	0	0	0	0	0	4.7	4.8	2.6	2.7	0	2.5	2.7
PLAY	5.0	0	0	0	0	0	0	4.7	4.8	2.6	2.6	0	2.5	2.7
STOP	5.0	0	0	0	0	0	0	4.7	4.8	2.6	2.7	0	2.5	2.7

	29	30	31	32	33	34	35	36	37	38	39	40	41	42
MODE														
REC	4.4	5.1	5.1	5.1	–	3.5	5.1	5.1	0.1	0	5.0	4.0	4.0	4.0
PLAY	4.4	5.1	5.1	5.1	–	–	5.1	5.1	0.1	0	5.1	4.0	4.0	4.0
STOP	4.4	5.1	5.1	5.1	–	–	5.0	5.0	0.1	0	5.1	4.0	4.0	4.0

IC6P (M51951AML)

	43	44
MODE		
REC	4.0	4.0
PLAY	4.0	4.0
STOP	4.0	4.0

IC6R (S8052ALB)

	1	2	3
MODE			
REC	5.1	4.4	0
PLAY	5.1	4.4	0
STOP	5.1	4.4	0

	1	2	3
MODE			
REC	3.1	3.1	0
PLAY	3.1	3.1	0
STOP	3.1	3.1	0

	Q6L0			Q6L1			Q6L2			Q6L3			Q6L4		
	E	B	C	E	B	C	E	B	C	E	B	C	E	B	C
MODE															
REC	0	0	0	0	0	0	0	0.6	0.1	0	0.1	4.1	0	0	4.1
PLAY	0	0	0	0	0	0	0	0.6	0.1	0	0.1	4.1	0	0	4.1
STOP	0	0	0	0	0	0	0	0.6	0.1	0	0.1	4.1	0	0	4.1

	Q6L5			Q6L6			Q6L7			Q6L8			Q6L9		
	E	B	C	E	B	C	E	B	C	E	B	C	D	S	G
MODE															
REC	0	4.2	0.2	0	4.7	0	0	0	12.4	5.0	4.9	0	5.1	3.1	0.1
PLAY	0	4.2	0.2	0	4.7	0	0	0	12.4	5.0	4.9	0	5.1	3.0	0.1
STOP	0	4.2	0.2	0	4.7	0	0	0	12.4	5.0	4.9	0	5.1	3.0	0.1

	Q6M0		
	E	B	C
MODE			
REC	0.2	2.1	4.8
PLAY	0.2	2.1	4.8
STOP	0.2	2.1	4.8

SCHEMATIC DIAGRAM (TT-1) (TIMER/TUNING BLOCK)

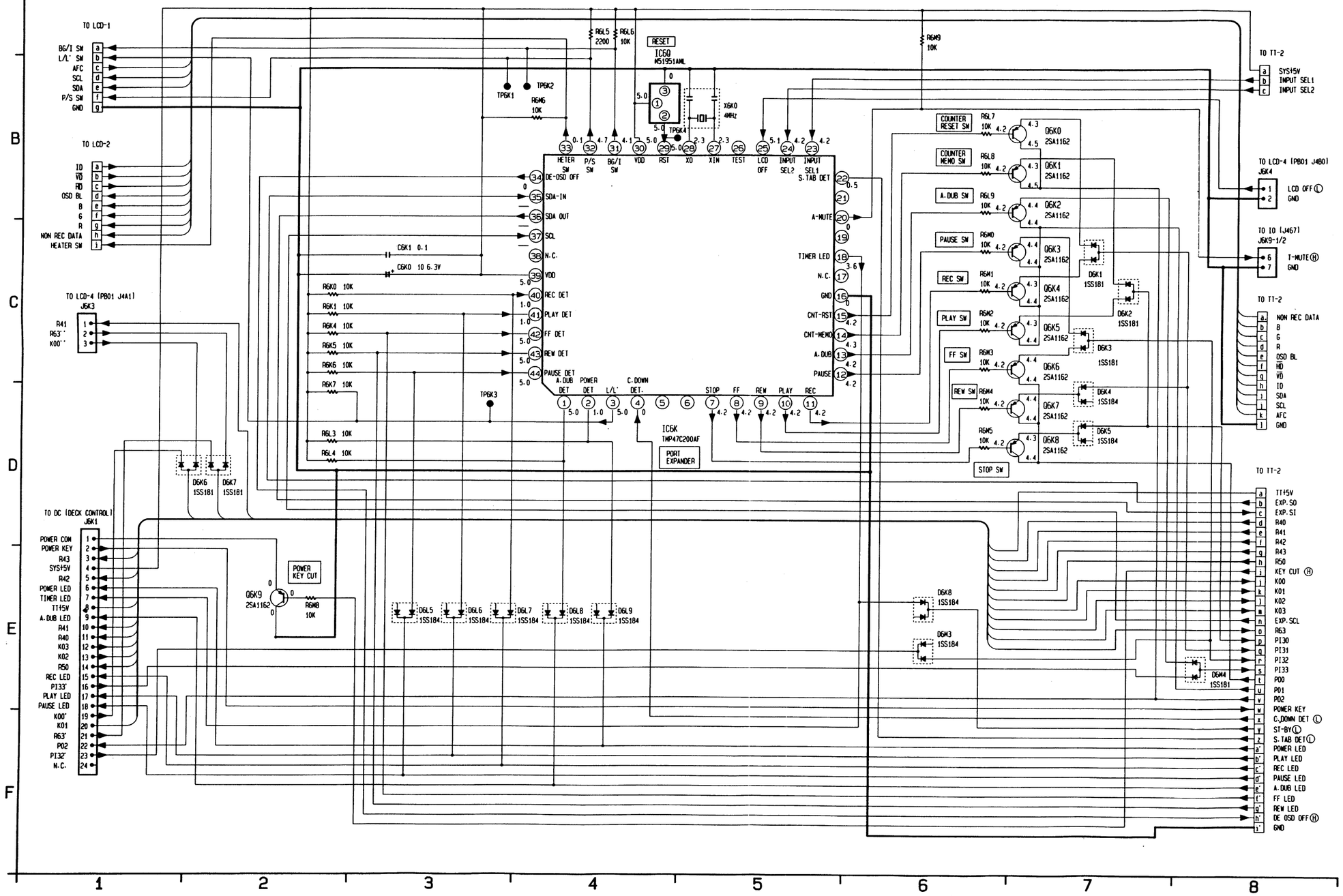

Q6K0 B7
Q6K1 B7
Q6K2 B7
Q6K3 C7
Q6K4 C7
Q6K5 C7
Q6K6 C7
Q6K7 D7
Q6K8 D7
Q6K9 E2

IC6K D4

D6K1 C7
D6K2 C7
D6K3 C7
D6K4 D7
D6K5 D7
D6K6 D2
D6K7 D2
D6K8 E6
D6M3 E6
D6M4 E8
D6L5 E3
D6L6 E3
D6L7 E4
D6L8 E4
D6L9 E4

TEST POINTS

TP6K1 B3
TP6K2 B4
TP6K3 D3
TP6K4 B4

IC6K (TMP47C200AF)

	1	2	3	4	5	6	7	8	9	10	11	12	13	14
MODE														
REC	5.0	1.0	5.0	0	0	0	4.2	4.2	4.2	4.2	4.2	4.2	4.2	4.3
PLAY	5.0	1.0	5.0	0	0	0	4.2	4.2	4.2	4.2	4.2	4.2	4.2	4.2
STOP	5.0	1.0	5.0	0	0	0	4.3	4.3	4.3	4.3	4.3	4.3	4.3	4.3

	15	16	17	18	19	20	21	22	23	24	25	26	27	28
MODE														
REC	4.2	0	0	3.6	0	0	0	0.5	4.2	4.2	5.1	0	2.3	2.3
PLAY	4.2	0	0	3.6	0	0	0	0.5	4.2	4.2	5.1	0	2.3	2.3
STOP	4.3	0	0	3.6	0	0	0	0.5	4.2	4.2	5.1	0	2.3	2.3

	29	30	31	32	33	34	35	36	37	38	39	40	41	42
MODE														
REC	5.0	5.0	4.1	4.7	0.1	0	–	–	–	0	5.0	1.0	1.0	5.0
PLAY	5.0	5.0	4.1	4.7	0.1	0	–	–	–	0	5.0	5.0	1.0	5.0
STOP	5.0	5.0	4.2	4.7	0.1	0	–	–	–	0	5.0	5.0	5.0	5.0

	43	44
MODE		
REC	5.0	5.0
PLAY	5.0	5.0
STOP	5.0	5.0

IC6Q (M51951AML)

	1	2	3
MODE			
REC	5.0	5.0	0
PLAY	5.0	4.9	0
STOP	5.0	5.0	0

	Q6K0			Q6K1			Q6K2			Q6K3			Q6K4		
	E	B	C	E	B	C	E	B	C	E	B	C	E	B	C
MODE															
REC	4.3	4.2	4.5	4.3	4.2	4.5	4.4	4.2	4.4	4.4	4.2	4.4	4.3	4.2	4.4
PLAY	4.3	4.2	4.5	4.3	4.2	4.5	4.3	4.2	4.4	4.4	4.2	4.4	4.3	4.2	4.4
STOP	4.4	4.3	4.5	4.3	4.3	4.5	4.4	4.3	4.5	4.4	4.3	4.5	4.3	4.4	4.5

	Q6K5			Q6K6			Q6K7			Q6K8			Q6K9		
	E	B	C	E	B	C	E	B	C	E	B	C	E	B	C
MODE															
REC	4.3	4.2	4.4	4.4	4.2	4.4	4.4	4.2	4.9	4.3	4.2	4.4	0	0	0
PLAY	4.3	4.2	4.4	4.4	4.2	4.5	4.4	4.2	4.5	4.3	4.2	4.5	0	0	0
STOP	4.3	4.3	4.5	4.4	4.3	4.5	4.4	4.3	4.5	4.4	4.3	4.5	0	0	0

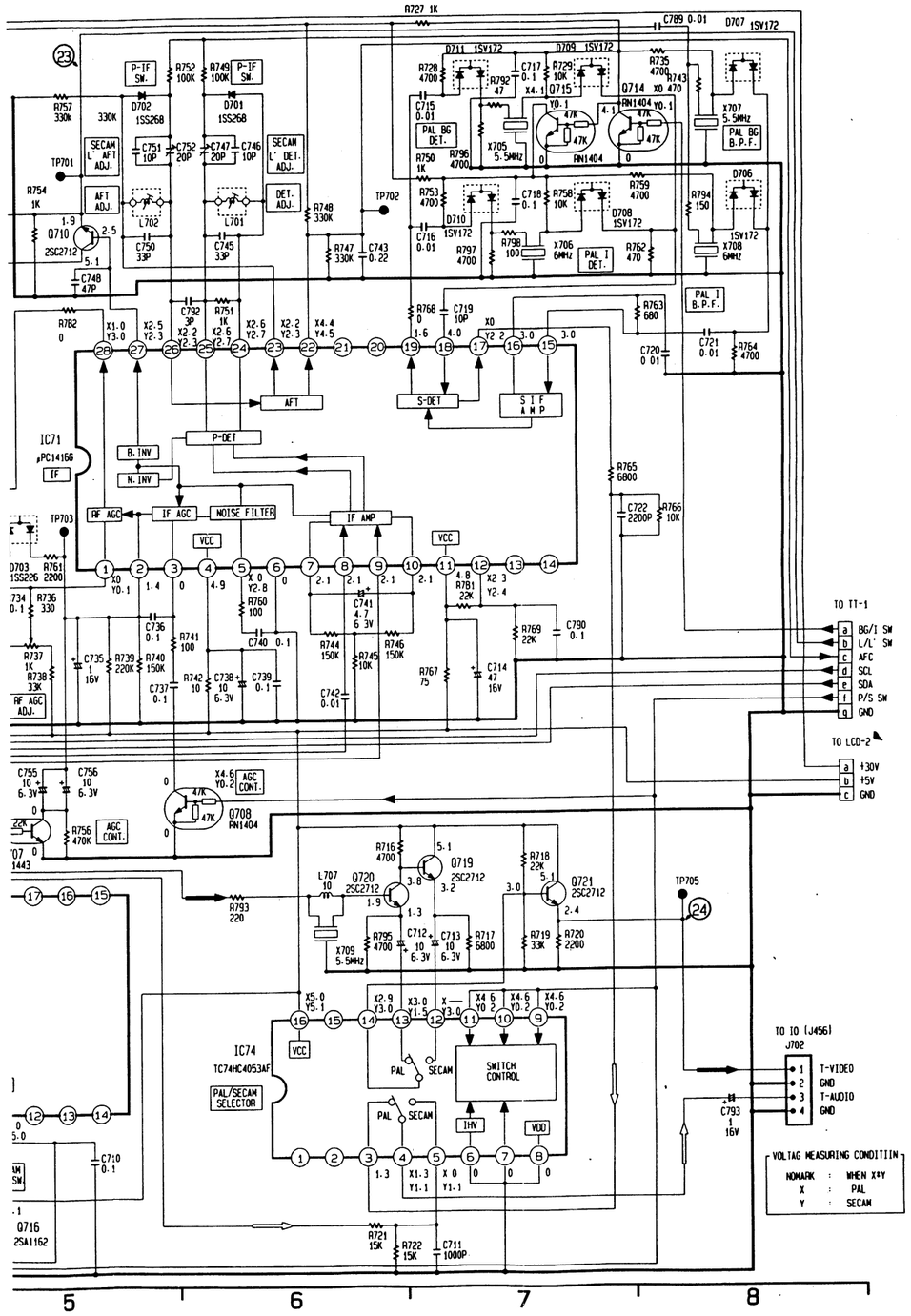

Q700	D2
Q701	B3
Q702	C2
Q703	D2
Q704	D3
Q705	B2
Q706	D4
Q707	E5
Q708	D6
Q709	F2
Q710	B5
Q711	F1
Q712	E2
Q713	E3
Q714	A8
Q715	A7
Q716	F5
Q719	E7
Q720	E6
Q721	E7

IC71	C5
IC72	E3
IC73	B2
IC74	E6

D701	A6
D702	A5
D703	C5
D704	E2
D705	F2
D706	B8
D707	A8
D708	B7
D709	A7
D710	B7
D711	A7
D772	F3

TEST POINTS

TP701	B5
TP702	B6
TP703	C5
TP704	F1
TP705	E8
TP706	B1
TP707	C2
TP708	D2
TP709	B2
TP710	B1
TP711	C3
TP712	C3
TP713	B4
TP714	D3
TP715	D3
TP716	D3
TP717	B2

E701 (TUNER)

	1	2	3	4	5	6	7	8	9
MODE									
REC	2.0	0	5.0	4.9	20.7	1.9	0.2	1.8	0
PLAY	2.0	0	5.0	4.9	20.7	1.9	0.2	1.8	0
STOP	2.0	0	5.0	4.9	20.7	1.9	0.2	1.8	0

IC71 (μPC14166) (PAL)

	1	2	3	4	5	6	7	8	9	10	11	12	13	14
MODE														
REC	0	1.4	0	4.9	0	0	2.1	2.1	2.1	2.1	4.8	2.3	1.9	2.2
PLAY	0	1.4	0	4.9	0	0	2.1	2.1	2.1	2.1	4.8	2.3	1.9	2.2
STOP	0	1.4	0	4.9	0	0	2.1	2.1	2.1	2.1	4.8	2.4	1.9	2.2

	15	16	17	18	19	20	21	22	23	24	25	26	27	28
MODE														
REC	3.0	3.0	0	4.0	1.6	0	2.1	4.4	2.2	2.6	2.6	2.2	2.5	1.0
PLAY	3.0	3.0	0	4.0	1.6	0	2.1	4.4	2.2	2.6	2.6	2.2	2.5	1.0
STOP	3.0	3.0	0	4.0	1.6	0	2.1	4.4	2.2	2.6	2.6	2.2	2.5	1.0

IC71 (μPC14166) (SECAM)

	1	2	3	4	5	6	7	8	9	10	11	12	13	14
MODE														
REC	0.1	1.4	0	4.9	2.8	0	2.1	2.1	2.1	2.1	4.8	2.4	1.9	2.2
PLAY	0.1	1.4	0	4.9	2.8	0	2.1	2.1	2.1	2.1	4.8	2.4	1.9	2.2
STOP	0.1	1.4	0	4.9	2.8	0	2.1	2.1	2.1	2.1	4.8	2.4	1.9	2.2

	15	16	17	18	19	20	21	22	23	24	25	26	27	28
MODE														
REC	3.0	3.0	2.2	4.0	1.6	0	2.1	4.5	2.3	2.7	2.7	2.3	2.3	3.0
PLAY	3.0	3.0	2.2	4.0	1.6	0	2.1	4.5	2.3	2.7	2.7	2.3	2.3	3.0
STOP	3.0	3.0	2.2	4.0	1.6	0	2.1	4.5	2.3	2.7	2.7	2.3	2.3	3.0

IC72 (μPC14166) (PAL)

	1	2	3	4	5	6	7	8	9	10	11	12	13	14
MODE														
REC	0	0	0	0	0	0	0	0	0	0	0	0	0	0
PLAY	0	0	0	0	0	0	0	0	0	0	0	0	0	0
STOP	0	0	0	0	0	0	0	0	0	0	0	0	0	0

	15	16	17	18	19	20	21	22	23	24	25	26	27	28
MODE														
REC	0	0	0	0	0	0	0	0	0	0	0	0	0	0
PLAY	0	0	0	0	0	0	0	0	0	0	0	0	0	0
STOP	0	0	0	0	0	0	0	0	0	0	0	0	0	0

IC72 (μPC14166) (SECAM)

	1	2	3	4	5	6	7	8	9	10	11	12	13	14
MODE														
REC	0.3	1.4	0.2	4.8	2.8	0	2.1	2.1	2.0	2.0	5.0	2.7	1.9	2.4
PLAY	0.3	1.4	0.2	4.8	2.8	0	2.1	2.1	2.0	2.0	5.0	2.7	1.9	2.4
STOP	0.3	1.4	0.2	4.8	2.8	0	2.1	2.1	2.0	2.1	5.0	2.7	1.9	2.4

	15	16	17	18	19	20	21	22	23	24	25	26	27	28
MODE														
REC	0	2.9	2.4	4.3	1.6	0	2.0	0.4	2.3	2.7	2.8	2.3	2.3	4.0
PLAY	0	2.9	2.4	4.3	1.6	0	2.0	0.4	2.3	2.7	2.8	2.3	2.3	4.0
STOP	0	2.9	2.4	4.3	1.6	0	2.0	0.4	2.3	2.8	2.8	2.3	2.3	4.0

IC73 (TSA5511T)

	1	2	3	4	5	6	7	8	9	10	11	12	13	14
MODE														
REC	1.8	3.5	5.0	5.0	–	5.0	3.0	0.1	0.1	2.6	0	5.0	2.0	2.0
PLAY	1.8	3.5	5.0	5.0	–	5.0	3.0	0.1	0.1	2.6	0	5.0	2.0	2.0
STOP	1.8	3.5	5.0	5.0	–	5.0	3.0	0.1	0.1	2.6	0	5.0	2.0	2.0

	15	16
MODE		
REC	0	0.6
PLAY	0	0.6
STOP	0	0.6

IC74 (TC74HC4053AF) (SECAM)

	1	2	3	4	5	6	7	8	9	10	11	12	13	14
MODE														
REC	0	0	1.3	1.1	1.1	0	0	0	0.2	0.2	0.2	3.0	1.5	3.0
PLAY	0	0	1.3	1.1	1.1	0	0	0	0.2	0.2	0.2	3.0	1.5	3.0
STOP	0	0	1.3	1.1	1.1	0	0	0	0.2	0.2	0.2	3.0	1.5	3.0

	15	16
MODE		
REC	0	5.1
PLAY	0	5.1
STOP	0	5.1

IC74 (TC74HC4053AF) (PAL)

	1	2	3	4	5	6	7	8	9	10	11	12	13	14
MODE														
REC	0	0	1.3	1.3	0	0	0	0	4.6	4.6	4.6	–	3.0	2.9
PLAY	0	0	1.3	1.3	0	0	0	0	4.7	4.7	4.7	–	3.0	2.9
STOP	0	0	1.3	1.3	0	0	0	0	4.7	4.7	4.7	–	3.0	2.9

	15	16
MODE		
REC	0	5.0
PLAY	0	5.0
STOP	0	5.1

	Q700			Q702			Q703			Q704			Q705		
	E	B	C	E	B	C	E	B	C	E	B	C	E	B	C
MODE															
REC	1.8	2.5	5.0	5.0	5.0	0.4	5.0	4.3	4.8	0	0.7	0.1	0	0.6	18.8
PLAY	1.8	2.5	5.0	5.0	5.0	0.4	5.0	4.3	4.8	0	0.7	0.1	0	0.6	18.8
STOP	1.8	2.5	5.0	5.0	5.0	0.4	5.0	4.3	4.8	0	0.7	0.1	0	0.6	18.8

	Q706			Q710			Q719			Q720			Q721		
	E	B	C	E	B	C	E	B	C	E	B	C	E	B	C
MODE															
REC	0.7	1.5	4.8	1.9	2.5	5.1	3.2	3.8	5.1	1.3	1.9	3.8	2.4	3.0	5.1
PLAY	0.7	1.5	4.8	1.9	2.5	5.1	3.2	3.8	5.1	1.3	1.9	3.8	2.4	3.0	5.1
STOP	0.7	1.5	4.8	1.9	2.5	5.1	3.2	3.8	5.1	1.3	1.9	3.8	2.4	3.0	5.1

(PAL)

	Q701			Q707			Q708			Q709			Q711		
	E	B	C	E	B	C	E	B	C	E	B	C	E	B	C
MODE															
REC	3.1	3.7	5.1	0	0	0	0	4.6	0	0	0	0	0	0.7	0
PLAY	3.1	3.7	5.1	0	0	0	0	4.7	0	0	0	0	0	0.7	0
STOP	3.1	3.8	5.1	0	0	0	0	4.7	0	0	0	0	0	0.7	0

(PAL)

	Q712			Q713			Q714			Q715			Q716		
	E	B	C	E	B	C	E	B	C	E	B	C	E	B	C
MODE															
REC	0	0	0	0	0.1	0	0	0	4.1	0	4.1	0.1	5.1	4.7	0
PLAY	0	0	0	0	0.1	0	0	0	4.1	0	4.1	0.1	5.1	4.7	0
STOP	0	0	0	0	0.1	0	0	0	4.1	0	4.1	0.1	5.1	4.7	0

(SECAM)

	Q701			Q707			Q708			Q709			Q711		
	E	B	C	E	B	C	E	B	C	E	B	C	E	B	C
MODE															
REC	3.1	3.7	5.1	0	5.0	0	0	0.2	0	5.0	4.3	5.0	0	0.2	4.8
PLAY	3.1	3.7	5.1	0	5.0	0	0	0.2	0	5.0	4.3	5.0	0	0.2	4.8
STOP	3.1	3.7	5.1	0	5.0	0	0	0.2	0	5.0	4.3	5.0	0	0.2	4.8

(SECAM)

	Q712			Q713			Q714			Q715			Q716		
	E	B	C	E	B	C	E	B	C	E	B	C	E	B	C
MODE															
REC	0	0.1	4.1	0	2.4	0.1	0	0.1	4.1	0	4.1	0.1	5.1	0.2	5.0
PLAY	0	0.1	4.1	0	2.4	0.1	0	0	4.1	0	4.1	0	5.1	0.2	5.0
STOP	0	0.1	4.1	0	2.4	0.1	0	0.1	4.1	0	4.1	0.1	5.1	0.2	5.0

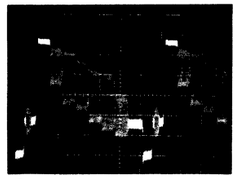

(23) TP701
200mV/Div. 10μs/Div.

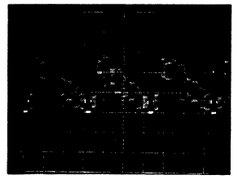

(24) T-Video out
500mV/Div. 20μs/Div.

(24) T-Video out SECAM
500mV/Div. 20μs/Div.

SCHEMATIC DIAGRAM (LCD-1)

(RF/IF BLOCK)

AUDIO SIGNAL PATH

VIDEO SIGNAL PATH

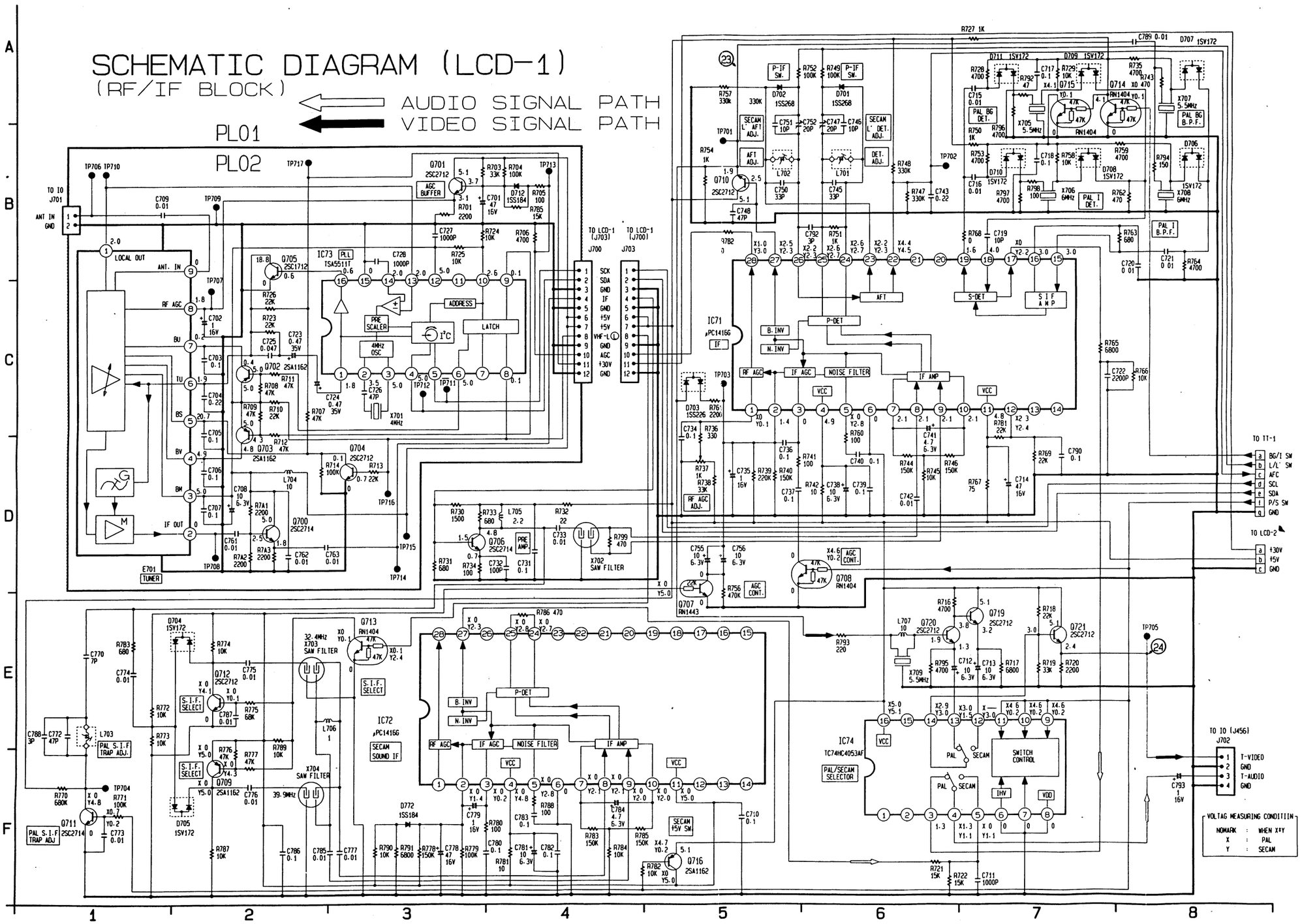

Q700	D2
Q701	B3
Q702	C2
Q703	D2
Q704	D3
Q705	B2
Q706	D4
Q707	E5
Q708	D6
Q709	F2
Q710	B5
Q711	F1
Q712	E2
Q713	E3
Q714	A8
Q715	A7
Q716	F5
Q719	E7
Q720	E6
Q721	E7

IC71	C5
IC72	E3
IC73	B2
IC74	E6

D701	A6
D702	A5
D703	C5
D704	E2
D705	F2
D706	B8
D707	A8
D708	B7
D709	A7
D710	B7
D711	A7
D772	F3

TEST POINTS

TP701	B5
TP702	B6
TP703	C5
TP704	F1
TP705	E8
TP706	B1
TP707	C2
TP708	D2
TP709	B2
TP710	B1
TP711	C3
TP712	C3
TP713	B4
TP714	D3
TP715	D3
TP716	D3
TP717	B2

E701 (TUNER)

	1
MODE	
REC	2.0
PLAY	2.0
STOP	2.0

IC71 (μPC141

	1
MODE	
REC	0
PLAY	0
STOP	0

	15
MODE	
REC	3.0
PLAY	3.0
STOP	3.0

IC71 (μPC141

	1
MODE	
REC	0.1
PLAY	0.1
STOP	0.1

	15
MODE	
REC	3.0
PLAY	3.0
STOP	3.0

IC72 (μPC141

	1
MODE	
REC	0
PLAY	0
STOP	0

	15
MODE	
REC	0
PLAY	0
STOP	0

IC72 (μPC141

	1
MODE	
REC	0.3
PLAY	0.3
STOP	0.3

	15
MODE	
REC	0
PLAY	0
STOP	0

IC73 (TSA551

	1
MODE	
REC	1.8
PLAY	1.8
STOP	1.8

	15
MODE	
REC	0
PLAY	0
STOP	0

IC74 (TC74HC

	1
MODE	
REC	0
PLAY	0
STOP	0

	15
MODE	
REC	0
PLAY	0
STOP	0

IC74 (TC74HC

	1
MODE	
REC	0
PLAY	0
STOP	0

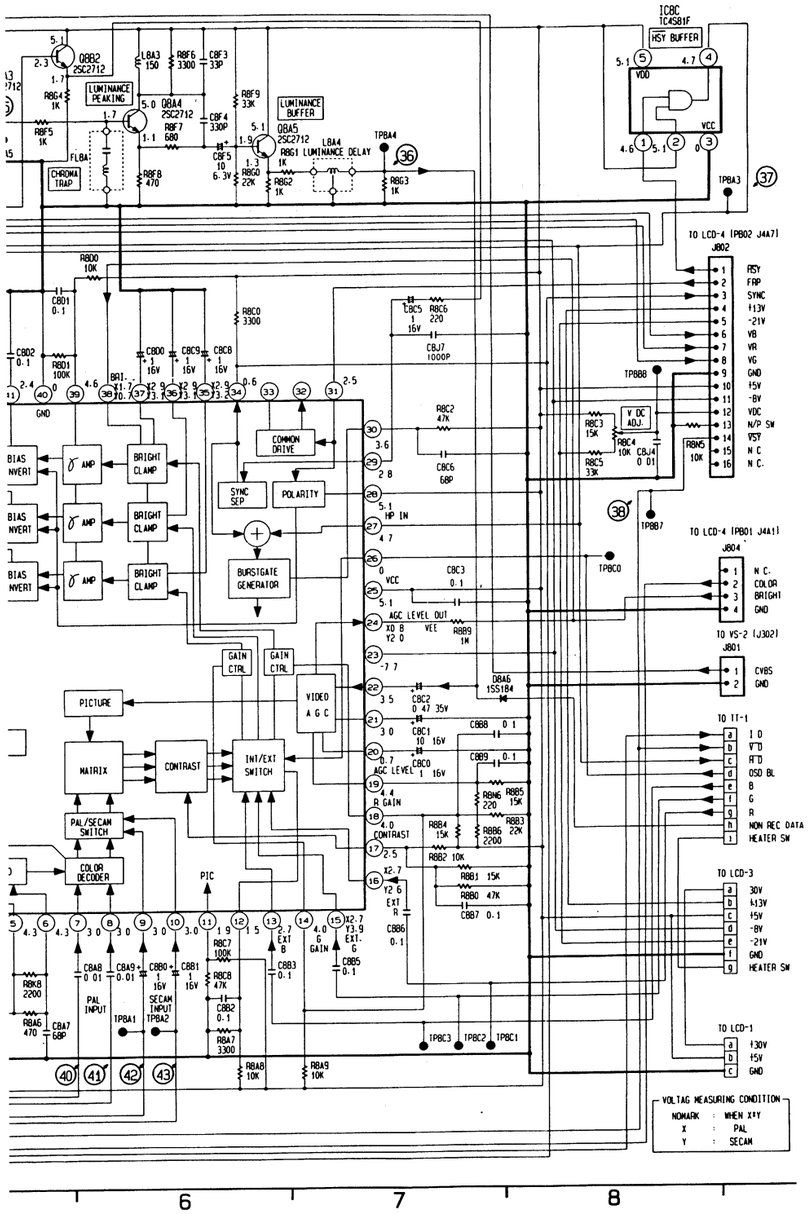

Q8A3	A5
Q8A4	A6
Q8A5	B6
Q8A6	D3
Q8A7	D3
Q8A8	C3
Q8A9	B3
Q8B0	B3
Q8B1	B1
Q8B2	A5
Q8B3	A5
Q8B4	A4
Q8B5	C3
Q8B6	C3

IC8A	C4
IC8B	C1
IC8C	A8
IC8D	F1
IC8E	F2

D8A2	F3
D8A3	D1
D8A4	F1
D8A5	E2
D8A6	D7

TEST POINTS

TP8A1	F6
TP8A2	F6
TP8A3	B8
TP8A4	B7
TP8A5	B5
TP8A6	B4
TP8A7	C4
TP8A8	D4
TP8A9	D4
TP8B0	D4
TP8B1	B1
TP8B2	D3
TP8B3	D1
TP8B4	D1
TP8B5	F3
TP8B6	E3
TP8B7	C8
TP8B8	C8
TP8B9	A5
TP8C0	D8
TP8C1	F7
TP8C2	F7
TP8C3	F7

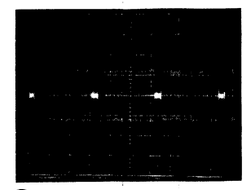

(30) TP8B1 SECAM 50mV/Div. 20µs/Div.

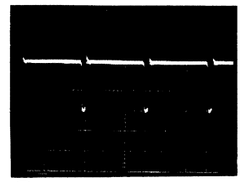

(31) TP8B2 SECAM 200mV/Div. 20µs/Div.

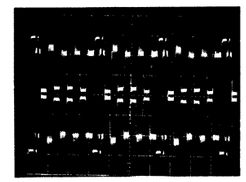

(32) TP8A8 2V/Div. 20µs/Div.

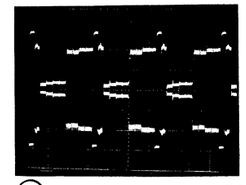

(33) TP8A7 PAL 2V/Div. 20µs/Div.

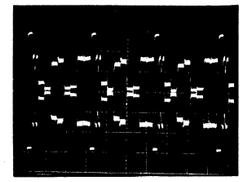

(34) TP8A6 PAL 2V/Div. 20µs/Div.

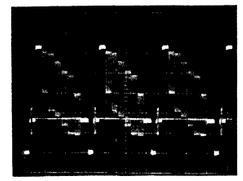

(35) TP8A5 PAL 200mV/Div. 20µs/Div.

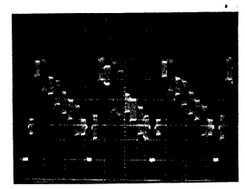

(35) TP8A5 SECAM 200mV/Div. 20µs/Div.

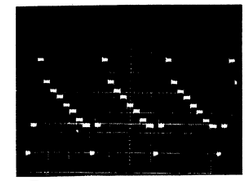

(36) TP8A4 100mV/Div. 20µs/Div.

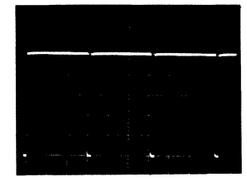

(37) TP8A3 1V/Div. 200µs/Div.

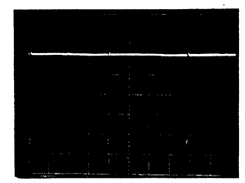

(38) TP8B7 1V/Div. 5µs/Div.

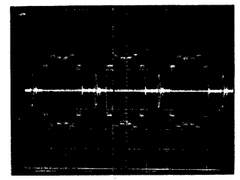

(39) TP8A9 200mV/Div. 20µs/Div.

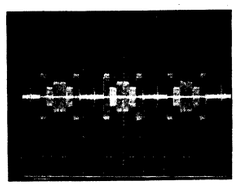

(40) TP8B3 100mV/Div. 20µs/Div.

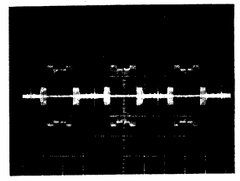

(41) TP8B4 100mV/Div. 20µs/Div.

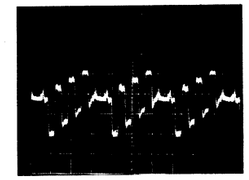

(42) TP8A1 SECAM 100mV/Div. 20µs/Div.

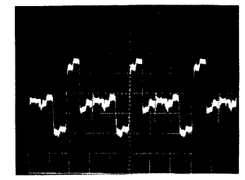

(43) TP8A2 SECAM 100mV/Div. 20µs/Div.

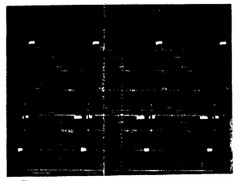

(44) TP8B9 200mV/Div. 20µs/Div.

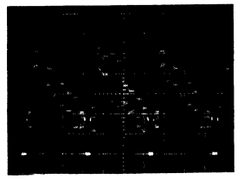

(44) TP8B9 SECAM 200mV/Div. 20µs/Div.

IC8B (M51404AFP) (SECAM)

	1	2	3	4	5	6	7	8	9	10	11	12	13	14
MODE														
REC	3.5	2.6	0.6	0	1.7	1.7	5.1	2.3	3.5	2.0	2.2	1.9	4.3	2.1
PLAY	3.5	2.4	0.6	0	1.7	1.7	5.1	2.3	3.3	2.0	2.2	1.5	0.2	2.2
STOP	3.5	2.7	0.6	0	1.7	1.7	5.1	2.3	3.5	2.0	2.2	1.9	4.3	2.1

	15	16	17	18	19	20	21	22	23	24
MODE										
REC	2.0	3.5	4.4	5.1	2.0	2.2	2.2	2.2	0.3	3.9
PLAY	2.0	3.1	4.4	5.1	2.0	2.2	2.2	2.2	0.3	3.9
STOP	2.0	3.5	4.4	5.1	2.0	2.2	2.2	2.2	0.3	3.9

IC8C (TC4581F)

	1	2	3	4	5
MODE					
REC	4.6	5.1	0	4.7	5.1
PLAY	4.6	5.1	0	4.7	5.1
STOP	4.6	5.1	0	4.7	5.1

IC8D (TC4081BF)

	1	2	3	4	5	6	7	8	9	10	11	12	13	14
MODE														
REC	4.7	3.5	4.4	0.3	0.7	0.7	0	0.7	4.4	0	4.4	4.4	4.8	5.1
PLAY	4.7	3.5	4.4	0.3	0.7	0.7	0	0.7	4.4	0	4.4	4.4	4.8	5.1
STOP	4.7	3.5	4.4	0.3	0.7	0.7	0	0.7	41.4	0	4.4	4.4	4.9	5.1

IC8E

	1	2	3	4	5	6	7	8	9	10	11	12	13	14
MODE														
REC	4.4	0.7	0	5.0	3.8	0	0	5.1	0	4.3	1.3	0.3	4.7	5.1
PLAY	4.4	0.7	–	–	–	5.0	0	0	5.1	4.3	1.3	0.3	4.7	5.1
STOP	4.4	0.7	0	5.0	3.8	0	0	0	4.7	4.3	1.3	0.3	4.7	5.1

	Q8A4			Q8A5			Q8A6			Q8A7			Q8A8		
	E	B	C	E	B	C	E	B	C	E	B	C	E	B	C
MODE															
REC	1.1	1.7	5.0	1.3	1.9	5.1	1.5	2.1	5.1	1.5	2.2	2.3	0	4.3	0
PLAY	1.1	1.7	5.0	1.3	1.9	5.1	1.5	2.1	5.1	1.5	2.2	2.3	0	4.3	0
STOP	1.1	1.7	5.0	1.3	1.9	5.1	1.5	2.1	5.1	1.5	2.2	2.3	0	4.3	0

	Q8A9			Q8B0			Q8B1			Q8B2			Q8B3		
	E	B	C	E	B	C	E	B	C	E	B	C	E	B	C
MODE															
REC	1.5	2.1	5.1	1.5	2.2	2.3	0.9	1.5	5.1	1.7	2.3	5.1	1.7	2.3	3.4
PLAY	1.5	2.1	5.1	1.5	2.2	2.3	0.9	1.5	5.1	1.7	2.3	5.1	1.7	2.3	3.4
STOP	1.5	2.2	5.1	1.5	2.2	2.3	0.9	1.5	5.1	1.7	2.3	5.1	1.7	2.3	3.4

	Q8B4			Q8B5			Q8B6		
	E	B	C	E	B	C	E	B	C
MODE									
REC	1.1	1.7	5.1	0	0.2	4.0	0	0.6	0
PLAY	1.1	1.7	5.1	0	0.2	4.1	0	0.6	0
STOP	1.1	1.7	5.1	0	0.2	4.0	0	0.6	0

(PAL)

	Q8A8		
	E	B	C
MODE			
REC	0	4.3	0
PLAY	0	4.3	0
STOP	0	4.3	0

(SECAM)

	Q8A8		
	E	B	C
MODE			
REC	4.3	4.3	0
PLAY	0.2	4.3	0
STOP	4.3	4.3	0

	15	16	17	18	19	20	21	22	23	24	25	26	27	28
MODE														
REC	3.9	2.6	2.5	4.0	4.4	0.7	3.0	3.5	–7.7	2.0	5.1	0	4.7	5.1
PLAY	2.7	2.6	2.5	4.0	4.4	0.7	3.0	3.5	–7.7	1.9	5.1	0	4.7	5.1
STOP	2.7	2.6	2.5	4.0	4.4	0.7	3.0	3.5	–7.7	2.0	5.1	0	4.7	5.1

	29	30	31	32	33	34	35	36	37	38	39	40	41	42
MODE														
REC	2.8	3.6	2.5	–6.8	0	0.6	3.2	3.1	3.1	0.7	4.6	0	2.4	2.4
PLAY	2.8	3.6	2.5	–6.8	0	0.6	3.1	3.1	3.1	0.7	4.6	0	2.4	2.4
STOP	2.8	3.6	2.5	–6.8	0	0.6	3.2	3.1	3.1	0.7	4.6	0	2.4	2.4

	43	44	45	46	47	48	49	50	51	52	53	54	55	56
MODE														
REC	2.4	–1.6	–1.6	–1.6	–1.6	–1.6	–1.6	–1.7	4.7	4.3	–7.7	3.5	3.0	0.9
PLAY	2.4	–1.6	–1.6	–1.6	–1.6	–1.6	–1.6	–1.7	4.7	4.3	–7.7	3.5	3.0	0.7
STOP	2.4	–1.6	–1.6	–1.6	–1.6	–1.6	–1.6	–1.7	4.7	4.3	–7.7	3.5	3.0	0.9

	57	58	59	60
MODE				
REC	1.8	3.0	2.0	5.1
PLAY	1.8	3.0	2.0	5.1
STOP	1.8	3.0	2.0	5.1

IC8B (M51404AFP) (PAL)

	1	2	3	4	5	6	7	8	9	10	11	12	13	14
MODE														
REC	–	2.4	–	0	1.7	1.7	5.1	2.3	3.2	2.0	2.2	–	0	2.2
PLAY	0	2.5	–	0	1.7	1.7	5.1	2.3	3.2	2.0	2.2	–	0	2.2
STOP	3.5	2.5	0.6	0	1.7	1.7	5.1	2.3	3.4	2.0	2.2	1.6	0	2.2

	15	16	17	18	19	20	21	22	23	24
MODE										
REC	2.0	–	4.3	5.1	2.0	2.2	2.2	2.2	0.3	3.9
PLAY	2.0	–	4.3	5.1	2.0	2.2	2.2	2.2	0.3	3.9
STOP	2.0	3.5	4.3	5.1	2.0	2.2	2.2	2.2	0.3	3.9

SCHEMATIC DIAGRAM (LCD-2)

(CHROMA DECODER/SYNC BLOCK)

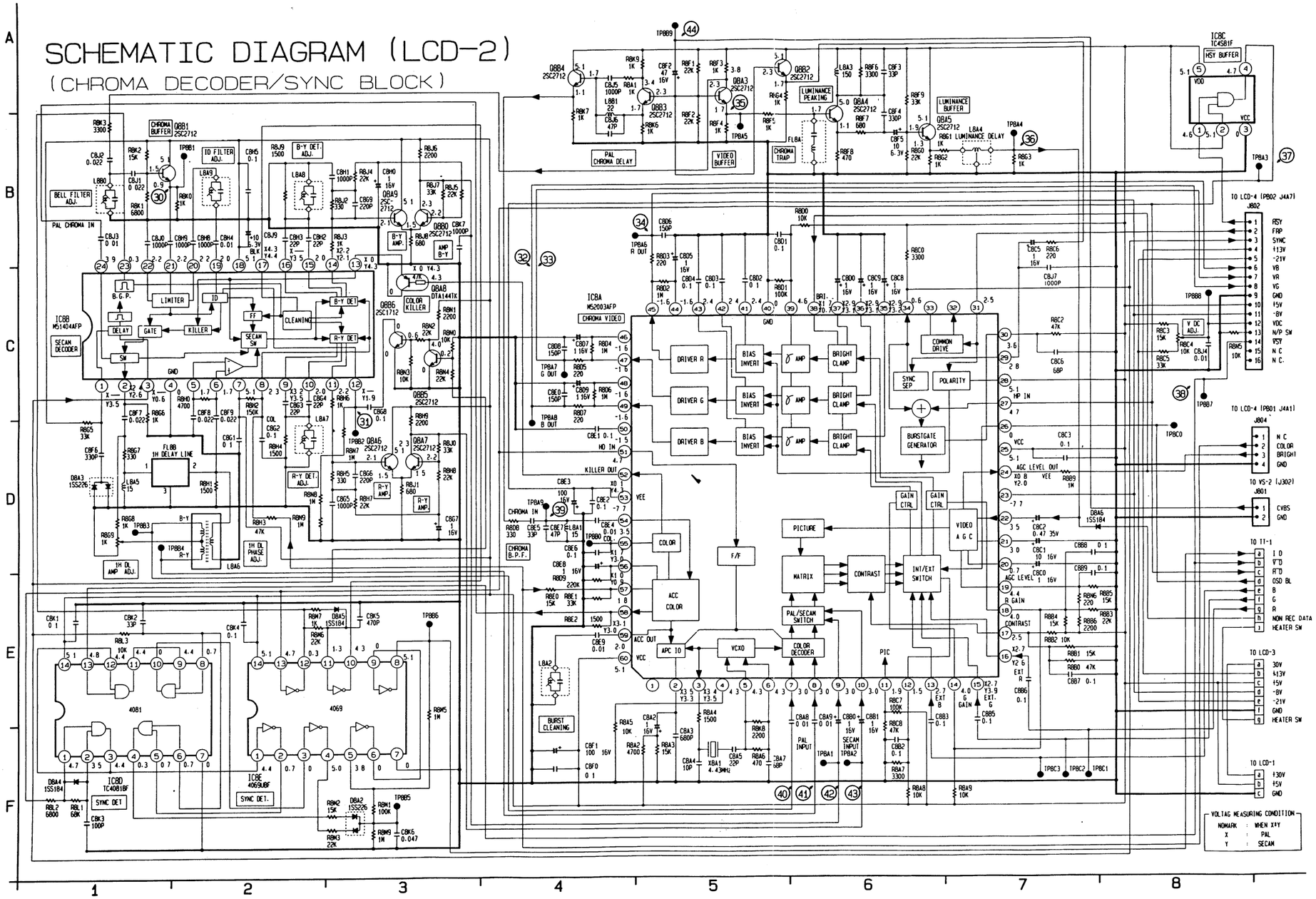

Q8A3	A5
Q8A4	A6
Q8A5	B6
Q8A6	D3
Q8A7	D3
Q8A8	C3
Q8A9	B3
Q8B0	B3
Q8B1	B1
Q8B2	A5
Q8B3	A5
Q8B4	A4
Q8B5	C3
Q8B6	C3

IC8A	C4
IC8B	C1
IC8C	A8
IC8D	F1
IC8E	F2

D8A2	F3
D8A3	D1
D8A4	F1
D8A5	E2
D8A6	D7

TEST POINTS

TP8A1	F6
TP8A2	F6
TP8A3	B8
TP8A4	B7
TP8A5	B5
TP8A6	B4
TP8A7	C4
TP8A8	D4
TP8A9	D4
TP8B0	D4
TP8B1	B1
TP8B2	D3
TP8B3	D1
TP8B4	D1
TP8B5	F3
TP8B6	E3
TP8B7	C8
TP8B8	C8
TP8B9	A5
TP8C0	D8
TP8C1	F7
TP8C2	F7
TP8C3	F7

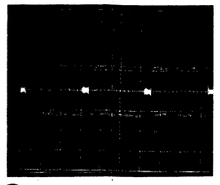

(30) TP8B1 SEC/
50mV/Div. 20µs/D

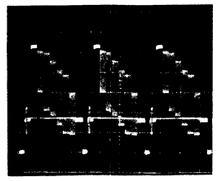

(35) TP8A5 F
200mV/Div. 20µs/D

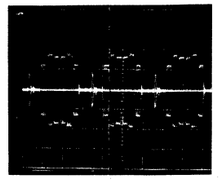

(39) TP8A9
200mV/Div. 20µs/

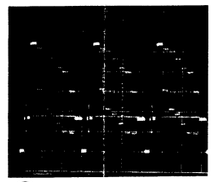

(44) TP8B9
200mV/Div. 20µs

IC8B (M51404AFP)

	1	2
MODE		
REC	3.5	2.6
PLAY	3.5	2.4
STOP	3.5	2.7

	15	16
MODE		
REC	2.0	3.5
PLAY	2.0	3.1
STOP	2.0	3.5

IC8C (TC4581F)

	1	2
MODE		
REC	4.6	5.1
PLAY	4.6	5.1
STOP	4.6	5.1

IC8D (TC4081BF)

	1	2
MODE		
REC	4.7	3.5
PLAY	4.7	3.5
STOP	4.7	3.5

IC8E

	1	2
MODE		
REC	4.4	0.7
PLAY	4.4	0.7
STOP	4.4	0.7

IC8A (M52003AFP) (PAL)

	1	2	3	4	5	6	7	8	9	10	11	12	13	14
MODE														
REC	0	3.5	3.4	4.3	4.3	4.3	3.0	3.0	3.0	3.0	1.9	1.5	2.7	4.0
PLAY	0.1	3.5	3.5	4.3	4.3	4.3	3.0	3.0	3.0	3.0	1.9	1.5	2.7	4.0
STOP	0	3.4	3.4	4.3	4.3	4.3	3.0	3.0	3.0	3.0	1.9	1.5	2.7	4.0

	15	16	17	18	19	20	21	22	23	24	25	26	27	28
MODE														
REC	2.7	2.7	2.5	4.0	4.4	0.7	3.0	3.5	–7.7	0.8	5.1	0	4.7	5.1
PLAY	2.7	2.7	2.5	4.0	4.4	0.8	3.0	3.5	–7.7	0.8	5.1	0	4.7	5.1
STOP	2.7	2.7	2.5	4.0	4.4	0.7	3.0	3.5	–7.6	0.8	5.1	0	4.7	5.1

	29	30	31	32	33	34	35	36	37	38	39	40	41	42
MODE														
REC	2.8	3.6	2.5	–6.8	0	0.6	2.9	2.9	2.9	1.7	4.6	0	2.4	2.4
PLAY	2.8	3.6	2.5	–6.8	0	0.6	2.9	2.9	2.9	1.7	4.6	0	2.4	2.4
STOP	2.8	3.6	2.5	–6.8	0	0.6	2.9	2.9	2.9	1.7	4.8	0	2.4	2.4

	43	44	45	46	47	48	49	50	51	52	53	54	55	56
MODE														
REC	2.4	–1.6	–1.6	–1.6	–1.6	–1.6	–1.6	–1.6	4.7	0.1	–7.7	3.5	1.7	1.0
PLAY	2.4	–1.6	–1.6	–1.6	–1.6	–1.6	–1.6	–1.6	4.7	0.1	–7.6	3.4	1.7	1.0
STOP	2.4	–1.6	–1.6	–1.6	–1.6	–1.6	–1.6	–1.6	4.7	0.1	–7.7	3.5	1.7	1.0

	57	58	59	60
MODE				
REC	1.8	3.1	2.0	5.1
PLAY	1.8	3.0	2.0	5.1
STOP	1.8	3.1	2.0	5.1

IC8A (M52003AFP) (SECAM)

	1	2	3	4	5	6	7	8	9	10	11	12	13	14
MODE														
REC	0.1	3.3	3.5	4.3	4.3	4.3	3.0	3.0	3.0	3.0	1.9	1.5	2.7	4.0
PLAY	0.1	3.3	3.5	4.3	4.3	4.3	3.0	3.0	3.0	3.0	1.9	1.5	2.6	4.0
STOP	0.1	3.3	3.5	4.3	4.3	4.3	3.0	3.0	3.0	3.0	1.9	1.5	2.7	4.0

	15	16	17	18	19	20	21	22	23	24	25	26	27	28
MODE														
REC	3.9	2.6	2.5	4.0	4.4	0.7	3.0	3.5	–7.7	2.0	5.1	0	4.7	5.1
PLAY	2.7	2.6	2.5	4.0	4.4	0.7	3.0	3.5	–7.7	1.9	5.1	0	4.7	5.1
STOP	2.7	2.6	2.5	4.0	4.4	0.7	3.0	3.5	–7.7	2.0	5.1	0	4.7	5.1

	29	30	31	32	33	34	35	36	37	38	39	40	41	42
MODE														
REC	2.8	3.6	2.5	–6.8	0	0.6	3.2	3.1	3.1	0.7	4.6	0	2.4	2.4
PLAY	2.8	3.6	2.5	–6.8	0	0.6	3.1	3.1	3.1	0.7	4.6	0	2.4	2.4
STOP	2.8	3.6	2.5	–6.8	0	0.6	3.2	3.1	3.1	0.7	4.6	0	2.4	2.4

	43	44	45	46	47	48	49	50	51	52	53	54	55	56
MODE														
REC	2.4	–1.6	–1.6	–1.6	–1.6	–1.6	–1.6	–1.7	4.7	4.3	–7.7	3.5	3.0	0.9
PLAY	2.4	–1.6	–1.6	–1.6	–1.6	–1.6	–1.6	–1.7	4.7	4.3	–7.7	3.5	3.0	0.7
STOP	2.4	–1.6	–1.6	–1.6	–1.6	–1.6	–1.6	–1.7	4.7	4.3	–7.7	3.5	3.0	0.9

	57	58	59	60
MODE				
REC	1.8	3.0	2.0	5.1
PLAY	1.8	3.0	2.0	5.1
STOP	1.8	3.0	2.0	5.1

IC8B (M51404AFP) (PAL)

	1	2	3	4	5	6	7	8	9	10	11	12	13	14
MODE														
REC	–	2.4	–	0	1.7	1.7	5.1	2.3	3.2	2.0	2.2	–	0	2.2
PLAY	0	2.5	–	0	1.7	1.7	5.1	2.3	3.2	2.0	2.2	–	0	2.2
STOP	3.5	2.5	0.6	0	1.7	1.7	5.1	2.3	3.4	2.0	2.2	1.6	0	2.2

	15	16	17	18	19	20	21	22	23	24
MODE										
REC	2.0	–	4.3	5.1	2.0	2.2	2.2	2.2	0.3	3.9
PLAY	2.0	–	4.3	5.1	2.0	2.2	2.2	2.2	0.3	3.9
STOP	2.0	3.5	4.3	5.1	2.0	2.2	2.2	2.2	0.3	3.9

BACK LIGHT P.C.B. DRAWING PB01

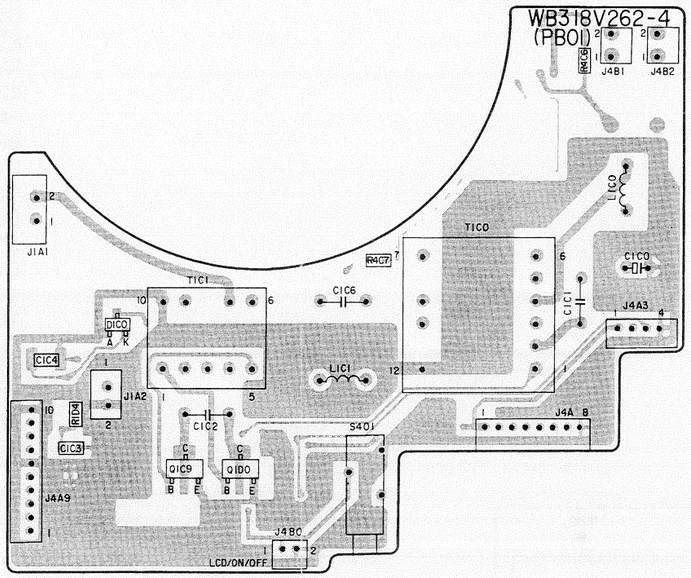

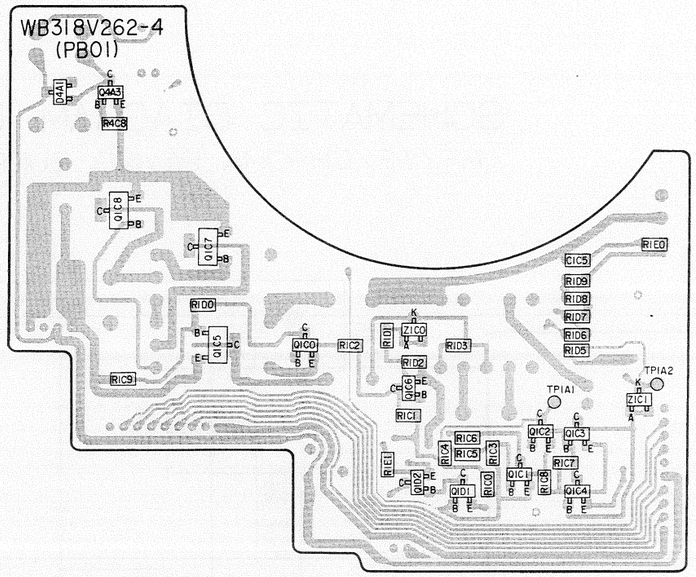

TRANSISTORS

Q1C0	B6
Q1C1	B7
Q1C2	B7
Q1C3	B7
Q1C4	B7
Q1C5	B6
Q1C6	B6
Q1C7	B6
Q1C8	A5
Q1C9	B2
Q1D0	B2
Q1D1	B6
Q1D2	B6
Q4A0	D6
Q4A1	D7
Q4A2	A5

IC

IC4A	E5

DIODES

D1C0	B1
Z1C0	B6
Z1C1	B7

CONTROL P.C.B. DRAWING PB02

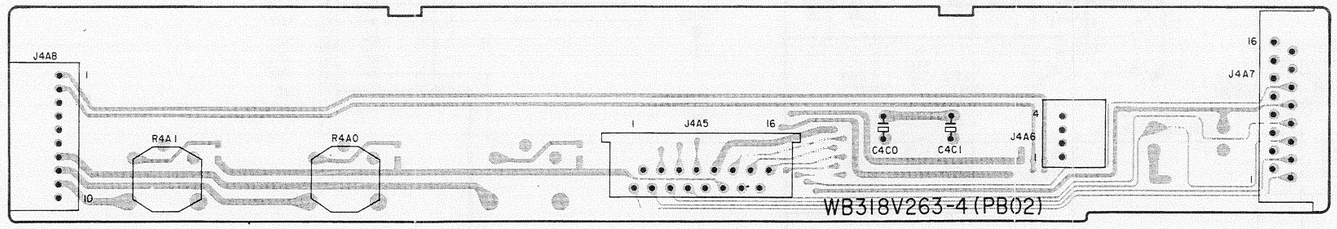

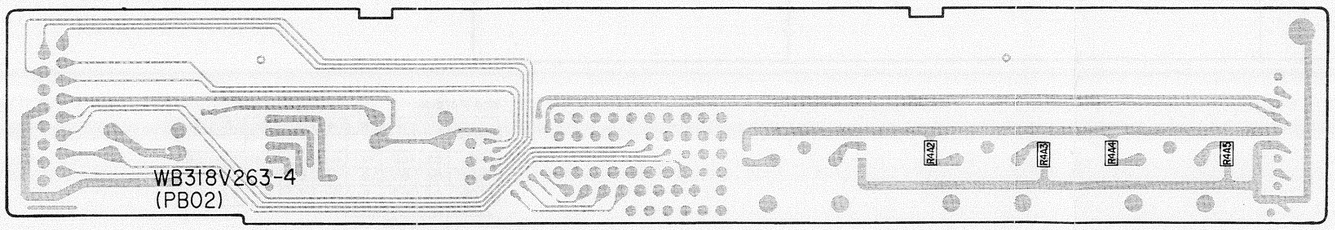

AMP P.C.B. DRAWING PB03

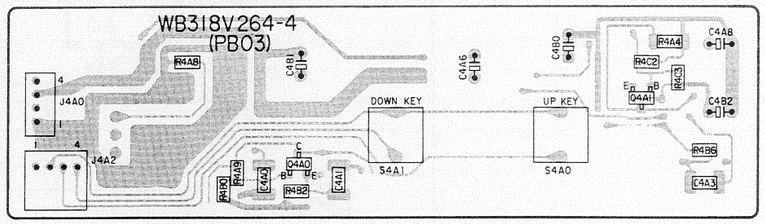

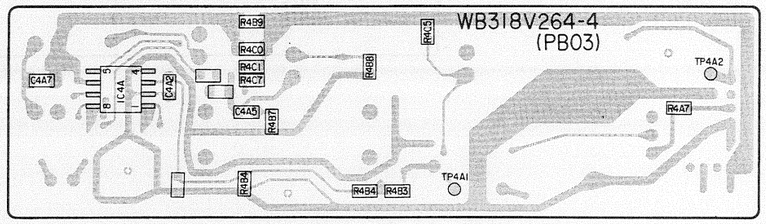

SCHEMATIC DIAGRAM (LCD-3)

(RF/IF/CHROMA POWER SUPPLY BLOCK)

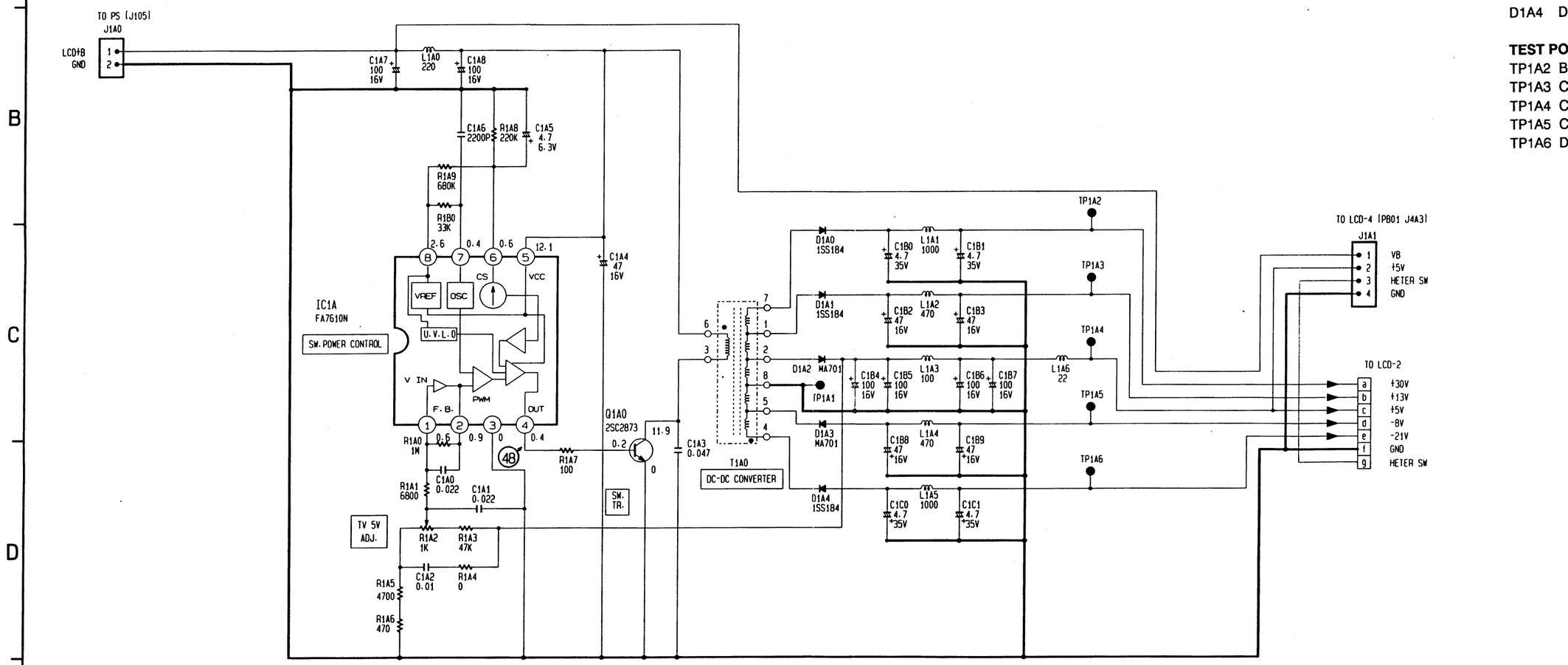

IC1A (FA7610N)

	1	2	3	4	5	6	7	8
MODE								
REC	0.6	0.9	0	0.4	12.1	0.6	0.4	2.6
PLAY	0.6	0.9	0	0.4	12.1	0.6	0.4	2.6
STOP	0.6	0.9	0	0.4	12.2	0.6	0.4	2.6

	Q1A0		
	E	B	C
MODE			
REC	0	0.2	11.9
PLAY	0	0.2	12.0
STOP	0	0.2	12.1

TRANSISTOR

Q1A0 C3

IC

IC1A C2

DIODES

D1A0 C4
D1A1 C4
D1A2 C4
D1A3 C4
D1A4 D4

TEST POINTS

TP1A2 B5
TP1A3 C5
TP1A4 C5
TP1A5 C5
TP1A6 D5

LUMINANCE/CHROMINANCE/AUDIO, VIDEO SELECTOR/AUDIO P.C.B. DRAWING PV01

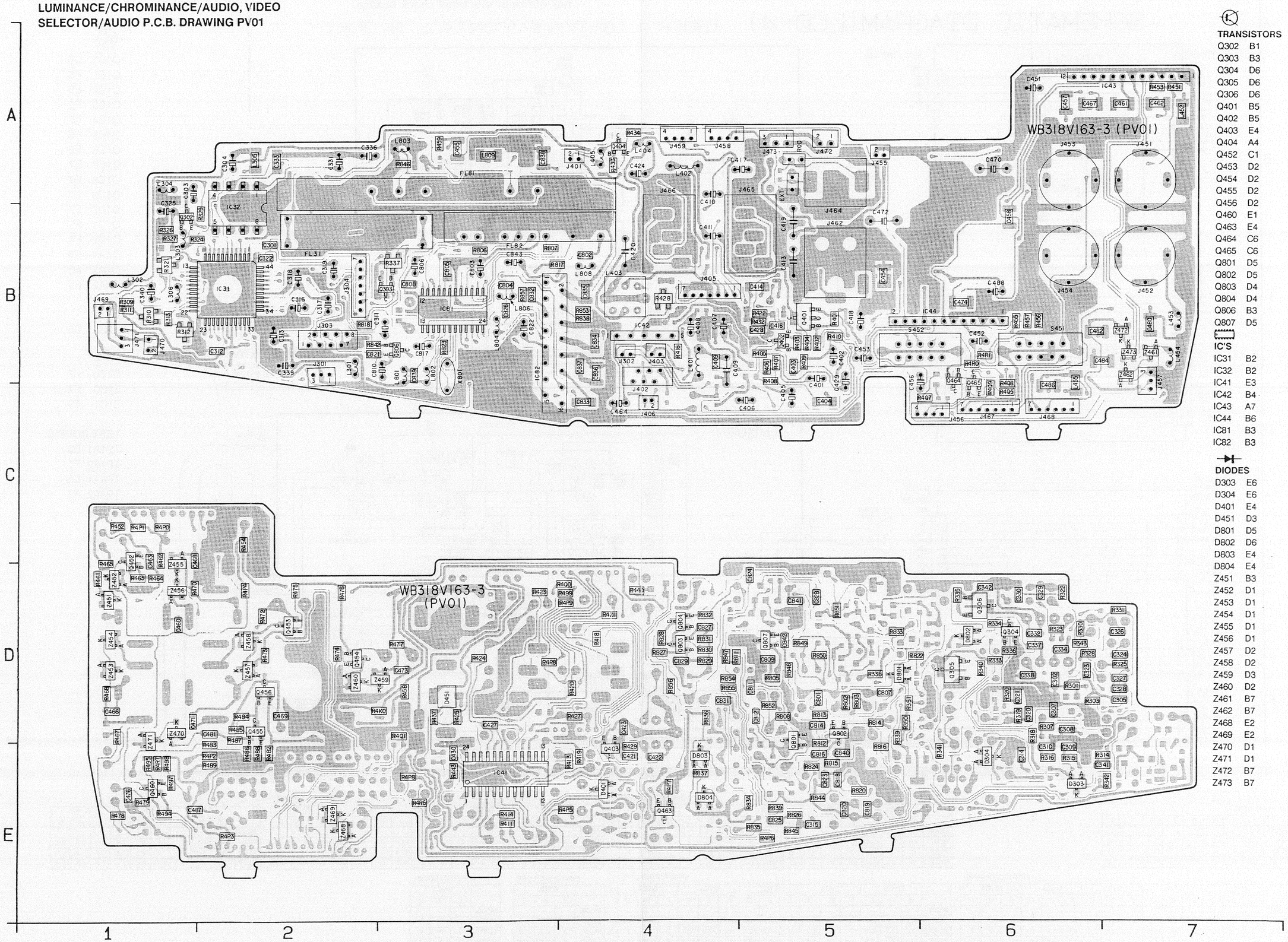

TRANSISTORS

Q302	B1
Q303	B3
Q304	D6
Q305	D6
Q306	D6
Q401	B5
Q402	B5
Q403	E4
Q404	A4
Q452	C1
Q453	D2
Q454	D2
Q455	D2
Q456	D2
Q460	E1
Q463	E4
Q464	C6
Q465	C6
Q801	D5
Q802	D5
Q803	D4
Q804	D4
Q806	B3
Q807	D5

IC'S

IC31	B2
IC32	B2
IC41	E3
IC42	B4
IC43	A7
IC44	B6
IC81	B3
IC82	B3

DIODES

D303	E6
D304	E6
D401	E4
D451	D3
D801	D5
D802	D6
D803	E4
D804	E4
Z451	B3
Z452	D1
Z453	D1
Z454	D1
Z455	D1
Z456	D1
Z457	D2
Z458	D2
Z459	D3
Z460	D2
Z461	B7
Z462	B7
Z468	E2
Z469	E2
Z470	D1
Z471	D1
Z472	B7
Z473	B7

Symbol ⚠ Fire or electrical shock hazard. Only original parts should be used to replace any part marked with symbol ⚠. Any other component substitution (other than original type), may increase risk of fire or electrical shock hazard.

SCHEMATIC DIAGRAM(LCD-4) (BACK LIGHT/AMP/CONTROL BLOCK)

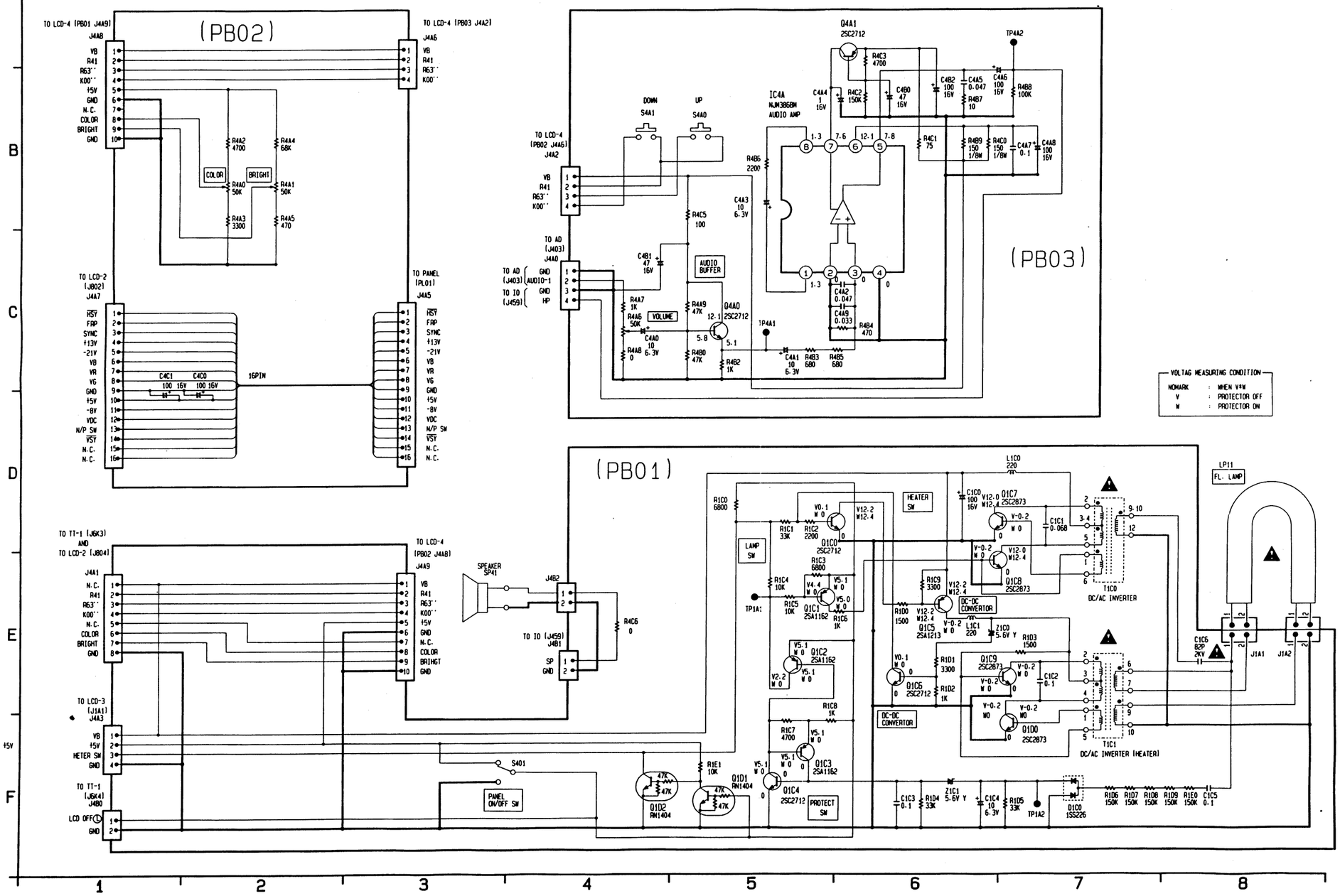

Q1C0 D6
Q1C1 E5
Q1C2 E5
Q1C3 F5
Q1C4 F5
Q1C5 E6
Q1C6 E6
Q1C7 E7
Q1C8 E7
Q1C9 E7
Q1D0 F7
Q1D1 F5
Q1D2 F4
Q4A1 C5
Q4A1 A5
Q4A2 E4

IC4A B5

D1C0 F7
Z1C0 E7
Z1C1 F6

TEST POINTS
TP1A1 E5
TP1A2 F7
TP4A1 C5
TP4A2 A7

IC4A (NJM386BM)

	1	2	3	4	5	6	7	8
MODE								
REC	1.3	0	0	0	7.8	12.1	7.6	1.3
PLAY	1.3	0	0	0	7.8	12.1	7.6	1.3
STOP	1.3	0	0	0	7.9	12.2	7.7	1.3

(PROTECTOR ON)

	Q1C0			Q1C1			Q1C2			Q1C3			Q1C4		
	E	B	C	E	B	C	E	B	C	E	B	C	E	B	C
MODE															
REC	0	0	12.4	0	0	0	0	0	0	0	0	0	0	0	0
PLAY	0	0	12.4	0	0	0	0	0	0	0	0	0	0	0	0
STOP	0	0	12.5	0	0	0	0	0	0	0	0	0	0	0	0

(PROTECTOR ON)

	Q1C5			Q1C6			Q1C7			Q1C8			Q1C9		
	E	B	C	E	B	C	E	B	C	E	B	C	E	B	C
MODE															
REC	12.4	12.4	0	0	0	0	0	0	12.4	0	0	12.4	0	0	0
PLAY	12.4	12.4	0	0	0	0	0	0	12.4	0	0	12.4	0	0	0
STOP	12.5	12.5	0	0	0	0	0	0	12.5	0	0	12.5	0	0	0

	Q4A0			Q4A1			Q4A2		
	E	B	C	E	B	C	E	B	C
MODE									
REC	5.1	5.8	12.1	7.6	8.3	7.6	0.1	0.8	0.1
PLAY	5.1	5.8	12.2	7.6	8.3	7.6	0.1	0.8	0.1
STOP	5.1	5.8	12.3	7.7	8.4	7.7	0.1	0.8	0.1

(PROTECTOR OFF)

	Q1CO			Q1C1			Q1C2			Q1C3			Q1C4		
	E	B	C	E	B	C	E	B	C	E	B	C	E	B	C
MODE															
REC	0	0.1	12.2	5.1	4.4	5.0	5.1	5.1	2.2	5.1	5.1	0	0	0	5.1
PLAY	0	0.1	12.2	5.1	4.4	5.0	5.1	5.1	2.2	5.1	5.1	0	0	0	5.1
STOP	0	0.1	12.3	5.1	4.4	5.0	5.1	5.1	2.2	5.1	5.1	0	0	0	5.1

(PROTECTOR OFF)

	Q1C5			Q1C6			Q1C7			Q1C8			Q1C9		
	E	B	C	E	B	C	E	B	C	E	B	C	E	B	C
MODE															
REC	12.2	12.2	-0.2	0	0	0.1	0	-0.2	12.0	0	-0.2	12.0	0	-0.2	-0.2
PLAY	12.2	12.2	-0.2	0	0	0.1	0	-0.2	12.1	0	-0.2	12.1	0	-0.2	-0.2
STOP	12.3	12.3	-0.2	0	0	0.1	0	-0.2	12.2	0	-0.2	12.2	0	-0.2	-0.2

(PROTECTOR OFF)

	Q1D0		
	E	B	C
MODE			
REC	0	-0.2	-0.2
PLAY	0	-0.2	-0.2
STOP	0	-0.2	-0.2

(PROTECTOR ON)

	Q1D0		
	E	B	C
MODE			
REC	0	0	0
PLAY	0	0	0
STOP	0	0	0

SCHEMATIC DIAGRAM (VS-2)

(LUMINANCE BLOCK)

⇦ MAIN SIGNAL PATH IN REC MODE

◀ MAIN SIGNAL PATH IN PB MODE

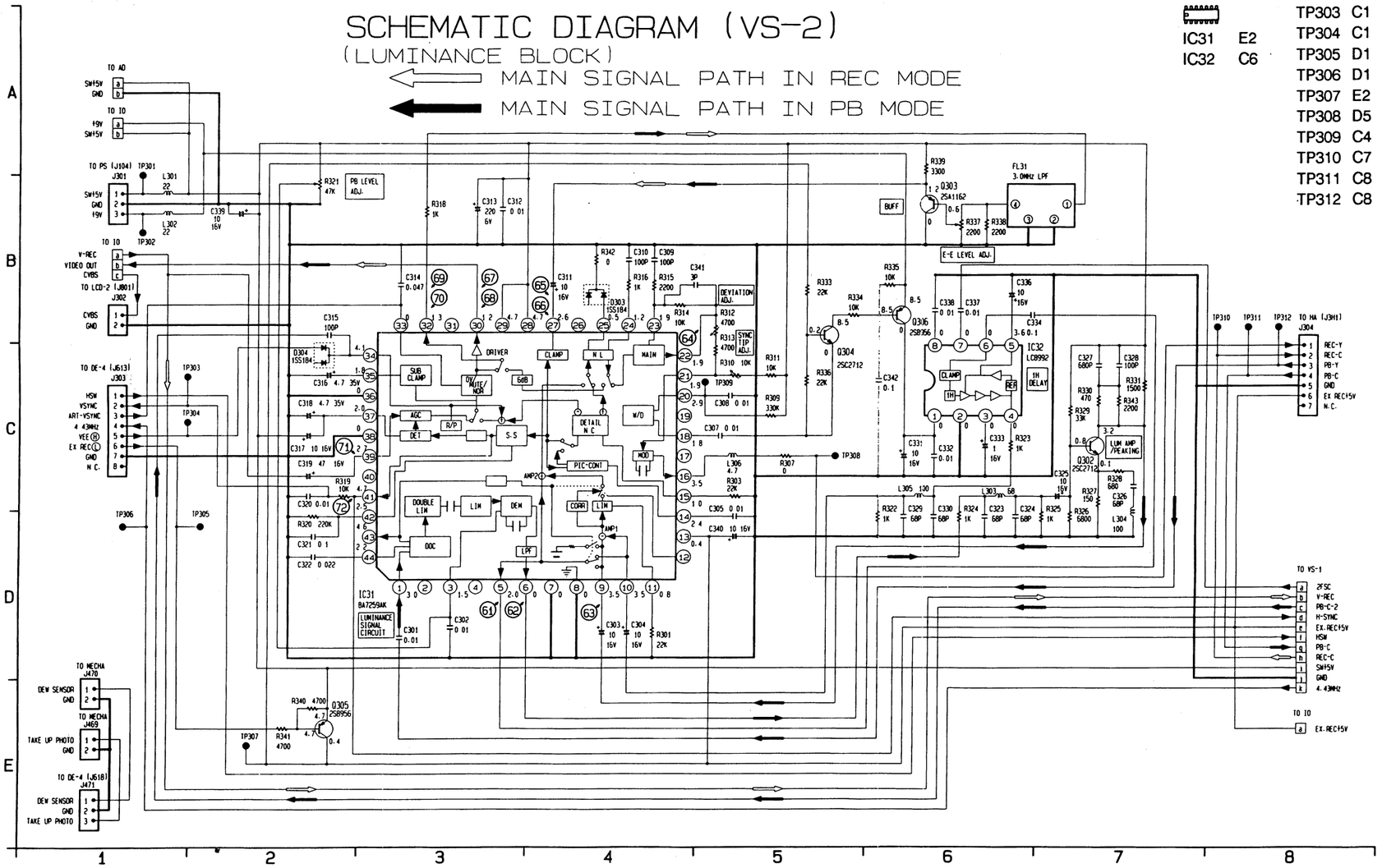

Q302	D7
Q303	B6
Q304	C5
Q305	E2
Q306	C6
IC31	E2
IC32	C6

D303	C4
D304	C2

TEST POINTS

TP301	B1
TP302	B1
TP303	C1
TP304	C1
TP305	D1
TP306	D1
TP307	E2
TP308	D5
TP309	C4
TP310	C7
TP311	C8
TP312	C8

(61) IC31 Pin 5 PB SP 10μs/Div. 200mV/Div.

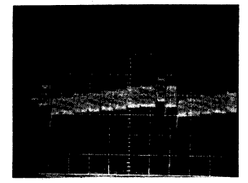

(62) IC31 Pin 6 PB SP 10μs/Div. 200mV/Div.

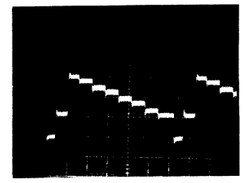

(63) IC31 Pin 9 PB SP 10μs/Div. 200mV/Div.

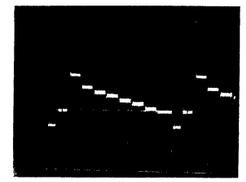

(64) IC31 Pin 22 REC SP 10μs/Div. 200mV/Div.

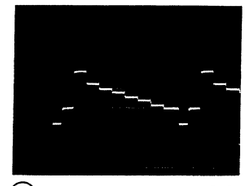

(65) IC31 Pin 27 REC SP 10μs/Div. 200mV/Div.

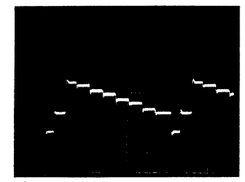

(66) IC31 Pin 27 PLAY SP 10μs/Div. 200mV/Div.

(67) IC31 Pin 30 REC SP 10μs/Div. 500mV/Div.

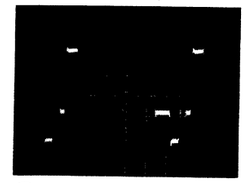

(68) IC31 Pin 30 PLAY SP 10μs/Div. 500mV/Div.

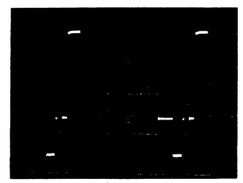

(69) IC31 Pin 32 REC SP 10μs/Div. 200mV/Div.

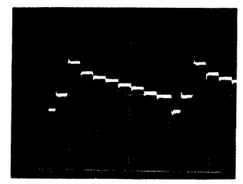

(70) IC31 Pin 32 PLAY SP 10μs/Div. 500mV/Div.

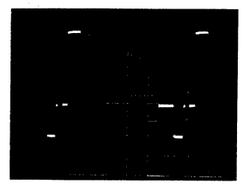

(71) IC31 Pin 39 REC SP 10μs/Div. 200mV/Div.

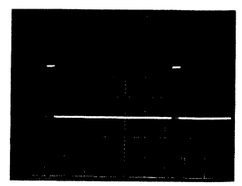

(72) IC31 Pin 41 PB SP 10μs/Div. 2V/Div.

IC31 (BA7259AK)

	1	2	3	4	5	6	7	8	9	10	11	12	13	14
MODE														
REC	3.0	0.3	1.5	0	2.0	0	0	0	3.5	3.5	0.8	0	0.4	2.4
PLAY	3.0	0	1.9	0	2.0	2.6	0	0	3.5	3.5	0.8	0	4.6	2.4
STOP	3.0	0	1.5	0	2.0	0	0	0	3.5	3.5	0.8	0	0.4	2.4

	29	30	31	32	33	34	35	36	37	38	39	40	41	42
MODE														
REC	4.7	1.2	0	1.3	0	4.1	1.8	0	2.0	0	2.7	0	4.7	2.5
PLAY	4.7	1.2	0	2.1	0	2.9	1.8	0	2.7	0	2.7	0	4.7	2.5
STOP	4.7	1.2	0	1.3	0	4.1	1.8	0	2.0	0	2.7	0	4.7	2.5

	15	16	17	18	19	20	21	22	23	24	25	26	27	28
MODE														
REC	1.0	3.5	0	1.8	0	2.9	1.9	1.9	1.9	1.2	0.5	0	2.6	4.7
PLAY	1.0	3.8	0	1.8	0	2.9	1.9	1.9	1.9	1.3	0.5	0	3.1	4.7
STOP	1.0	3.5	0	1.8	0	2.9	1.9	1.9	1.9	1.2	0.5	0	2.6	4.7

	43	44
MODE		
REC	4.6	2.2
PLAY	4.0	2.5
STOP	4.6	2.2

IC32 (LC8992)

	1	2	3	4	5	6	7	8
MODE								
REC	0	0	0	0	3.6	0	.0	0
PLAY	8.5	0	12.0	2.8	3.6	3.5	1.9	2.8
STOP	0	0	0	0	3.6	0	0	0

	Q302			Q303			Q304			Q305			Q306		
	E	B	C	E	B	C	E	B	C	E	B	C	E	B	C
MODE															
REC	0.1	0.8	3.2	1.2	0.6	0	0	0.2	8.5	4.7	4.7	0.4	8.5	8.5	0
PLAY	0.1	0.8	3.2	1.6	1.0	0	2.8	3.4	4.6	4.6	4.0	4.6	8.5	7.8	8.5
STOP	0.1	0.8	3.2	1.2	0.6	0	0	0.4	0.4	4.7	4.7	0.4	8.5	8.5	0

SCHEMATIC DIAGRAM (VS-1)

(CHROMINANCE BLOCK)

⇦ MAIN SIGNAL PATH IN REC MODE

← MAIN SIGNAL PATH IN PB MODE

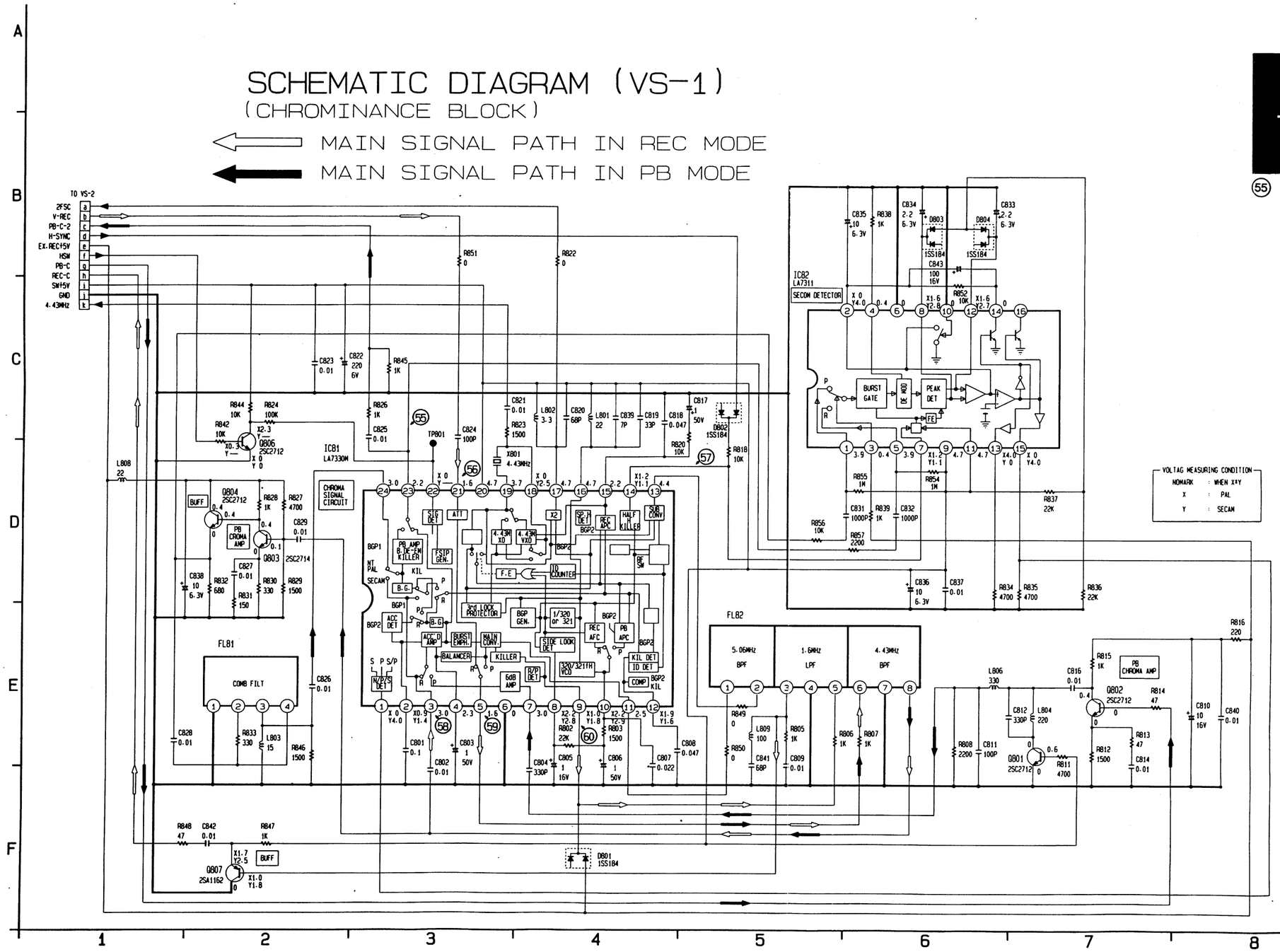

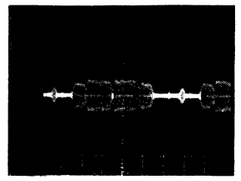

(55) IC81 Pin 23 — 10μs/Div. — PB SP 500mV/Div.

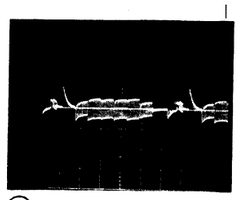

(56) IC81 Pin 21 — 10μs/Div. — REC SP 500mV/Div.

Q801	E7
Q802	E7
Q803	D2
Q804	D2
Q806	D2
Q807	F2
IC81	D2
IC82	B5
D801	F4
D802	C5
D803	B6
D804	B6

TEST POINT
TP801 C3

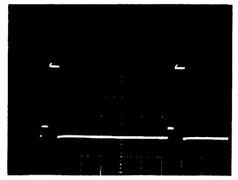

(57) IC81 Pin 14 — 10μs/Div. — 1V/Div.

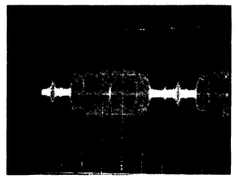

(58) IC81 Pin 3 — 10μs/Div. — PB SP 100mV/Div.

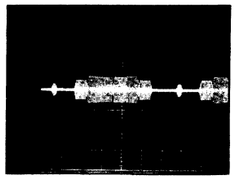

(59) IC81 Pin 5 — 10μs/Div. — PB SP 500mV/Div.

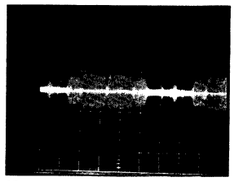

(60) IC81 Pin 9 — 10μs/Div. — REC SP 500mV/Div.

IC81 (LA7330M) (PAL)

	1	2	3	4	5	6	7	8	9	10	11	12	13	14
MODE														
REC	0	0.9	3.0	2.3	1.6	0	3.0	2.2	1.0	2.2	2.5	1.9	4.4	1.2
PLAY	0	1.4	2.9	2.3	2.4	0	2.9	2.7	4.0	3.3	2.4	2.7	0	0.9
STOP	0	0.9	3.0	2.3	1.6	0	3.0	2.2	1.0	2.2	2.5	1.9	0	1.2

	15	16	17	18	19	20	21	22	23	24
MODE										
REC	2.2	4.7	4.7	0	3.7	4.7	1.6	0	2.2	3.0
PLAY	2.2	4.7	4.6	0	3.6	4.7	1.6	0	0	3.1
STOP	1.6	4.7	4.7	2.9	3.7	4.7	1.6	0	2.2	3.0

IC81 (LA7330M) (SECAM)

	1	2	3	4	5	6	7	8	9	10	11	12	13	14
MODE														
REC	4.0	1.4	3.0	2.4	1.6	0	3.0	2.8	1.8	2.9	2.5	1.6	4.4	1.1
PLAY	4.0	1.5	3.0	2.3	2.8	0	3.0	2.9	4.1	2.9	2.4	–	4.4	1.1
STOP	4.0	1.4	3.0	2.4	1.6	0	3.0	2.8	1.8	2.9	2.5	1.6	4.4	1.1

	15	16	17	18	19	20	21	22	23	24
MODE										
REC	2.2	4.7	4.8	2.5	3.7	4.8	1.6	–	2.2	3.1
PLAY	2.2	4.7	4.7	2.5	3.6	4.7	1.6	–	0	3.2
STOP	2.3	4.8	4.8	2.5	3.7	4.8	1.6	0.2	2.2	3.1

IC82 (LA7311) (PAL)

	1	2	3	4	5	6	7	8	9	10	11	12	13	14
MODE														
REC	3.9	0	0.4	0.4	3.9	0	1.2	1.6	4.7	0	4.7	1.6	4.0	0
PLAY	3.9	0	4.5	0.4	3.9	0	1.2	2.8	4.7	0	4.7	2.8	3.9	0
STOP	3.9	0	0.4	0.4	3.9	0	1.2	1.6	4.7	0	4.7	1.6	4.0	0

	15	16
MODE		
REC	0	0
PLAY	0	0
STOP	0	0

IC82 (LA7311) (SECAM)

	1	2	3	4	5	6	7	8	9	10	11	12	13	14
MODE														
REC	3.9	4.0	0.4	0.4	3.9	0	1.1	2.8	4.8	0	4.8	2.7	0	0
PLAY	3.9	0.6	4.5	0.4	3.9	0	1.1	2.8	4.7	0	4.7	2.8	3.9	0
STOP	3.9	4.0	0.3	0.4	3.9	0	1.1	2.7	4.8	0	4.8	2.8	0	0

	15	16
MODE		
REC	4.0	0
PLAY	3.9	0
STOP	4.0	0

(PAL)

	Q801			Q802			Q803			Q804			Q806		
	E	B	C	E	B	C	E	B	C	E	B	C	E	B	C
MODE															
REC	0	0.6	0	0	0	0.4	0	0.1	0.4	0	0.4	0.4	0	0.3	2.3
PLAY	0	0.6	0	1.9	2.5	3.0	0.4	1.1	3.4	2.8	3.4	4.6	0	0.3	2.3
STOP	0	0.6	0	0	0	0.4	0	0.1	0.4	0	0.4	0.4	0	–	–

(PAL)

	Q807		
	E	B	C
MODE			
REC	1.7	1.0	0
PLAY	4.6	4.1	0
STOP	1.7	1.0	0

(SECAM)

	Q801			Q802			Q803			Q804			Q806		
	E	B	C	E	B	C	E	B	C	E	B	C	E	B	C
MODE															
REC	0	0.6	0	0	0	0.4	0	0.1	0.4	0	0.4	0.4	0	–	–
PLAY	0	0.6	0	1.9	2.5	3.1	0.4	1.1	3.4	2.8	3.4	4.6	0	–	–
STOP	0	0.6	0	0	0	0.5	0	0.1	0.5	0	0.5	0.1	0	0	0

(SECAM)

	Q807		
	E	B	C
MODE			
REC	2.5	1.8	0
PLAY	4.6	4.1	0
STOP	2.5	1.8	0

RS

SCHEMATIC DIAGRAM (HA)

(HEAD AMP BLOCK)

REC MODE

PB MODE

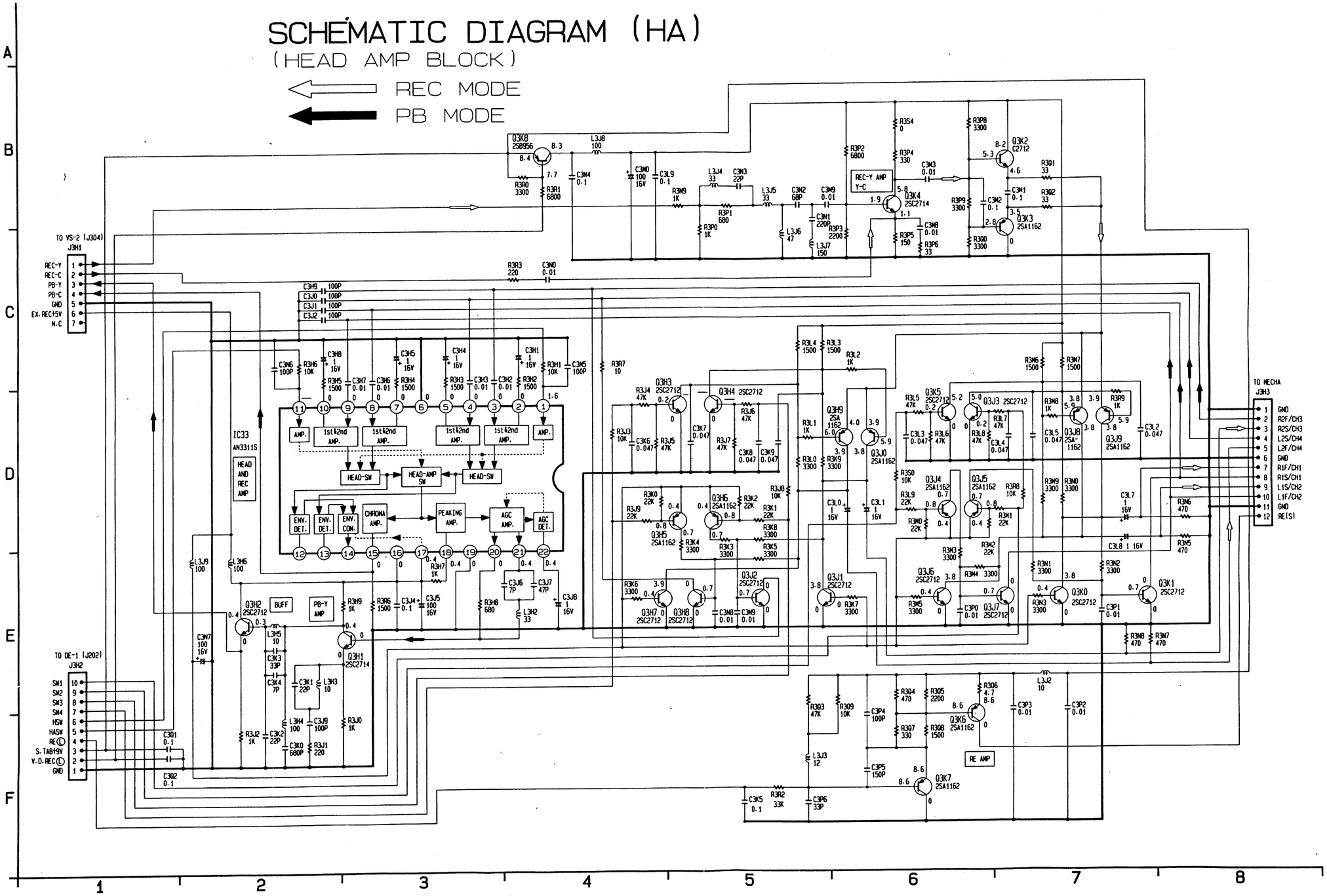

Q3H1	E3
Q3H2	E2
Q3H3	D4
Q3H4	D5
Q3H5	D4
Q3H6	D5
Q3H7	E4
Q3H8	E5
Q3H9	D6
Q3J0	D6
Q3J1	E6
Q3J2	E5
Q3J3	D6
Q3J4	D6
Q3J5	D6
Q3J6	E6
Q3J7	E6
Q3J8	D7
Q3J9	D7
Q3K0	E7
Q3K1	E8
Q3K2	B7
Q3K3	C7
Q3K4	B6
Q3K5	D6
Q3K6	F6
Q3K7	F6
Q3K8	B4
IC33	D2

IC33 (AN3311S)

	1	2	3	4	5	6	7	8	9	10	11	12	13	14
MODE														
REC	1.6	0	0	0	0	0	0	0	0	0	–	0.1	0	0
PLAY	1.7	0.9	0.7	0.7	0.9	0	0.9	0.7	0.7	0.9	2.1	2.6	0	0
STOP	–	0	0	0	0	0	0	0	0	0	–	0.1	0	0

	15	16	17	18	19	20	21	22
MODE								
REC	0	0	0.4	0.4	0	0	0.4	0.4
PLAY	2.5	4.5	4.5	4.3	0	1.5	2.9	2.9
STOP	0	0	0.4	0.4	0	0	0.4	0.4

	Q3H1			Q3H2			Q3H3			Q3H4			Q3H5		
	E	B	C	E	B	C	E	B	C	E	B	C	E	B	C
MODE															
REC	0	0	0.4	0	0.3	0.4	0	0.,2	–	0	–	–	0.4	0.8	0.7
PLAY	0.8	1.5	3.7	3.0	3.7	4.5	0	0.2	0	0	0.2	0	4.6	4.1	3.4
STOP	0	0	0.4	0	0.4	0.4	0	0.2	0	0	0.2	0	0.4	–	0

	Q3H6			Q3H7			Q3H8			Q3H9			Q3J0		
	E	B	C	E	B	C	E	B	C	E	B	C	E	B	C
MODE															
REC	0.4	0.8	0.7	0	0.4	3.9	0	0.7	0	4.0	6.0	3.9	3.9	5.9	3.8
PLAY	4.6	4.1	3.4	0	0.7	0	0	0.5	0	0	0	0	0	0	0
STOP	0.4	–	0	0	0	0	0	0	0	0	0	0	0	0	0

	Q3J1			Q3J2			Q3J3			Q3J4			Q3J5		
	E	B	C	E	B	C	E	B	C	E	B	C			
MODE															
REC	0	0	3.8	0	0.7	0	0	0.2	5.0	0.4	0.8	0.7	0.4	0.8	0.7
PLAY	0	0.7	0	0	0.5	0	0	0.2	0	4.6	4.0	3.4	4.6	4.1	3.4
STOP	0	0	0	0	0	0	0	0.2	0	0.4	–	0	0.4	–	0

	Q3J6			Q3J7			Q3J8			Q3J9			Q3K0		
	E	B	C	E	B	C	E	B	C	E	B	C	E	B	C
MODE															
REC	0	0.4	3.8	0	0.7	0	3.8	5.9	3.8	3.9	5.9	3.8	0	0.4	3.8
PLAY	0	0.7	0	0	0.5	0	0	0	0	0	0	0	0	0.7	0
STOP	0	0.4	0	0	0	0	0	0	0	0	0	0	0	0.4	0

	Q3K1			Q3K2			Q3K3			Q3K4			Q3K5		
	E	B	C	E	B	C	E	B	C	E	B	C	E	B	C
MODE															
REC	0	0.7	0	4.6	5.3	8.2	3.5	2.8	0	1.1	1.9	5.6	0	0.2	5.2
PLAY	0	0.5	0	0	0	0	0	0	0	0	0	0	0	0.2	0
STOP	0	0	0	0	0	0	0	0	0	0	0	0	0	0.2	0

	Q3K6			Q3K7			Q3K8		
	E	B	C	E	B	C	E	B	C
MODE									
REC	8.6	8.6	0	8.6	8.6	0	8.4	7.7	8.3
PLAY	8.6	8.6	0	8.6	8.6	0	8.6	8.6	0
STOP	8.6	7.6	0	8.6	8.6	0	8.6	8.6	0

HEAD AMP P.C.B. DRAWING PH01

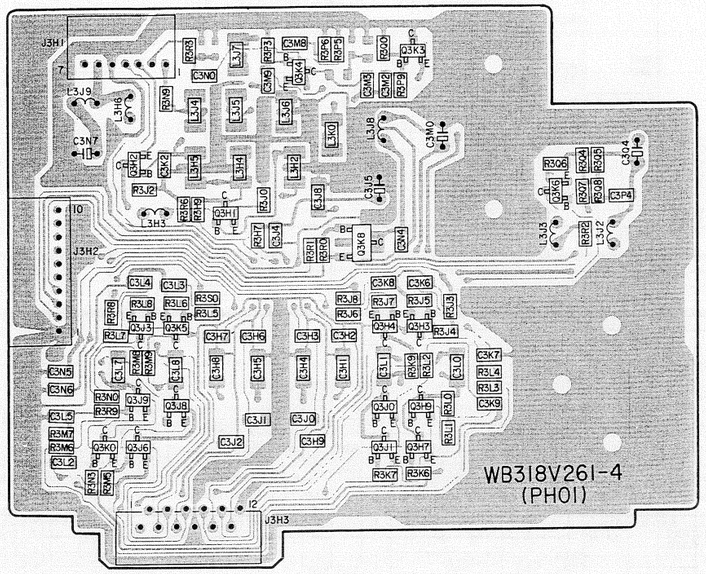

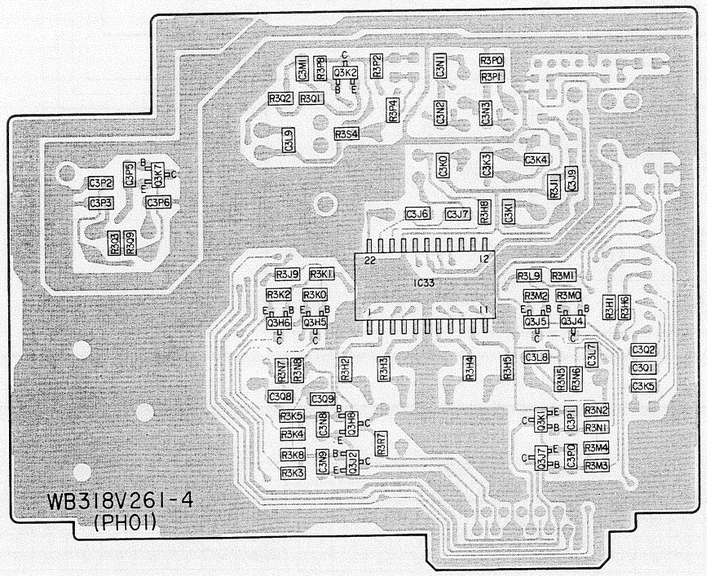

TRANSISTORS

Q3H1	B2
Q3H2	A2
Q3H3	B3
Q3H4	B2
Q3H5	D2
Q3H6	D2
Q3H7	B3
Q3H8	E2
Q3H9	B3
Q3J0	B2
Q3J1	B2
Q3J2	E2
Q3J3	B2
Q3J4	D3
Q3J5	D3
Q3J6	B2
Q3J7	E3
Q3J8	B2
Q3J9	B2
Q3K0	B1
Q3K1	E3
Q3K2	D2
Q3K3	A2
Q3K4	A2
Q3K5	B2
Q3K6	A3
Q3K7	D2
Q3K8	B2

IC

IC33	D3

DIODES

LED1	B6
LED2	B6
LED3	B6
LED4	C6
LED5	C6
LED6	C6

SCHEMATIC DIAGRAM (HA)

(HEAD AMP BLOCK)

REC MODE

PB MODE

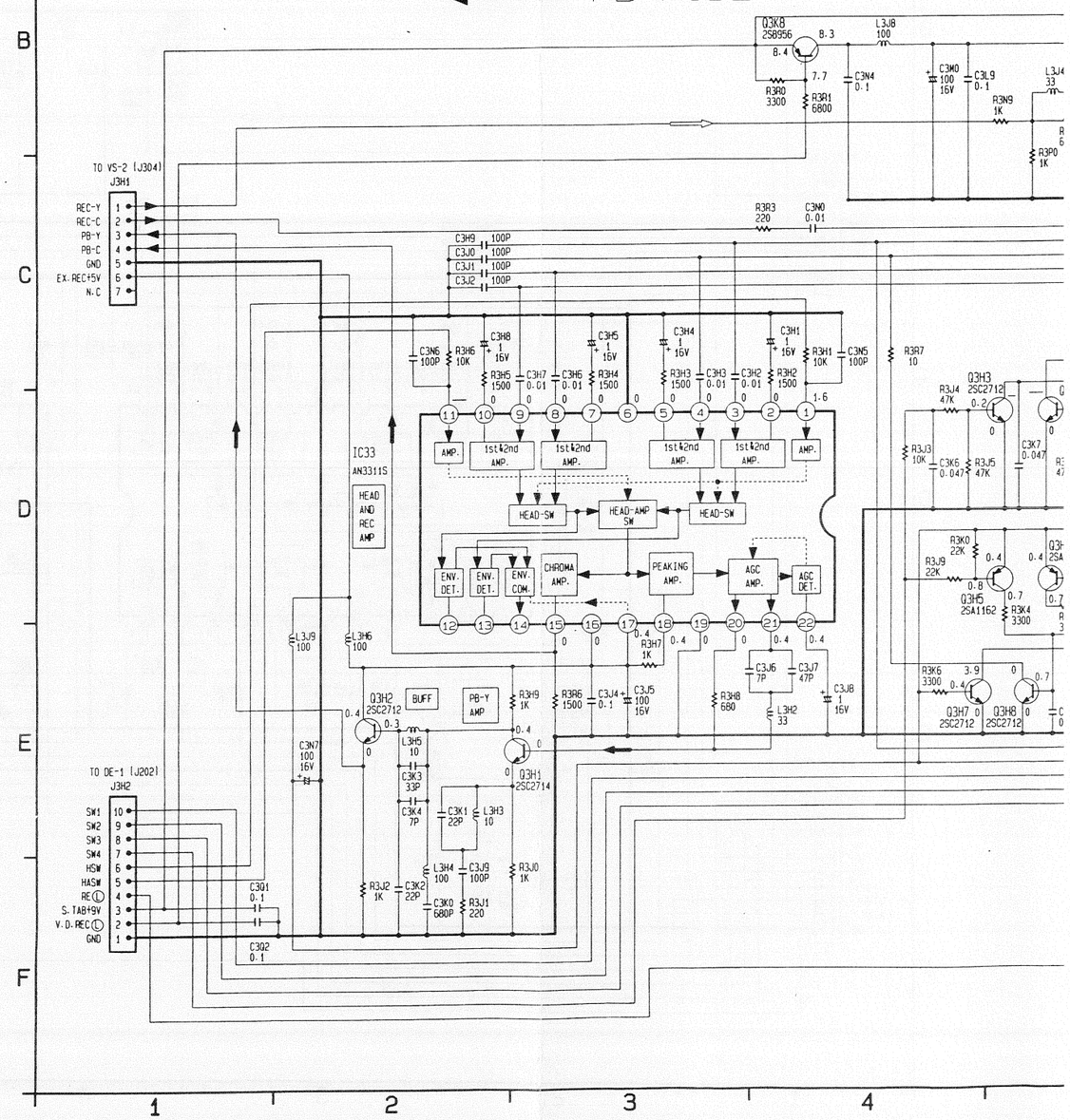

IC33 (AN3311S)

	1	2	3	4	5	6	7	8	9	10	11	12	13	14
MODE														
REC	1.6	0	0	0	0	0	0	0	0	0	–	0.1	0	0
PLAY	1.7	0.9	0.7	0.7	0.9	0	0.9	0.7	0.7	0.9	2.1	2.6	0	0
STOP	–	0	0	0	0	0	0	0	0	0	–	0.1	0	0

	15	16	17	18	19	20	21	22
MODE								
REC	0	0	0.4	0.4	0	0	0.4	0.4
PLAY	2.5	4.5	4.5	4.3	0	1.5	2.9	2.9
STOP	0	0	0.4	0.4	0	0	0.4	0.4

	Q3H1			Q3H2			Q3H3			Q3H4			Q3H5		
	E	B	C	E	B	C	E	B	C	E	B	C	E	B	C
MODE															
REC	0	0	0.4	0	0.3	0.4	0	0.2	–	0	–	–	0.4	0.8	0.7
PLAY	0.8	1.5	3.7	3.0	3.7	4.5	0	0.2	0	0	0.2	0	4.6	4.1	3.4
STOP	0	0	0.4	0	0.4	0.4	0	0.2	0	0	0.2	0	0.4	–	0

	Q3H6			Q3H7			Q3H8			Q3H9			Q3J0		
	E	B	C	E	B	C	E	B	C	E	B	C	E	B	C
MODE															
REC	0.4	0.8	0.7	0	0.4	3.9	0	0.7	0	4.0	6.0	3.9	3.9	5.9	3.8
PLAY	4.6	4.1	3.4	0	0.7	0	0	0.5	0	0	0	0	0	0	0
STOP	0.4	–	0	0	0	0	0	0	0	0	0	0	0	0	0

SCHEMATIC DIAGRAM (DC)
(KEY BLOCK)

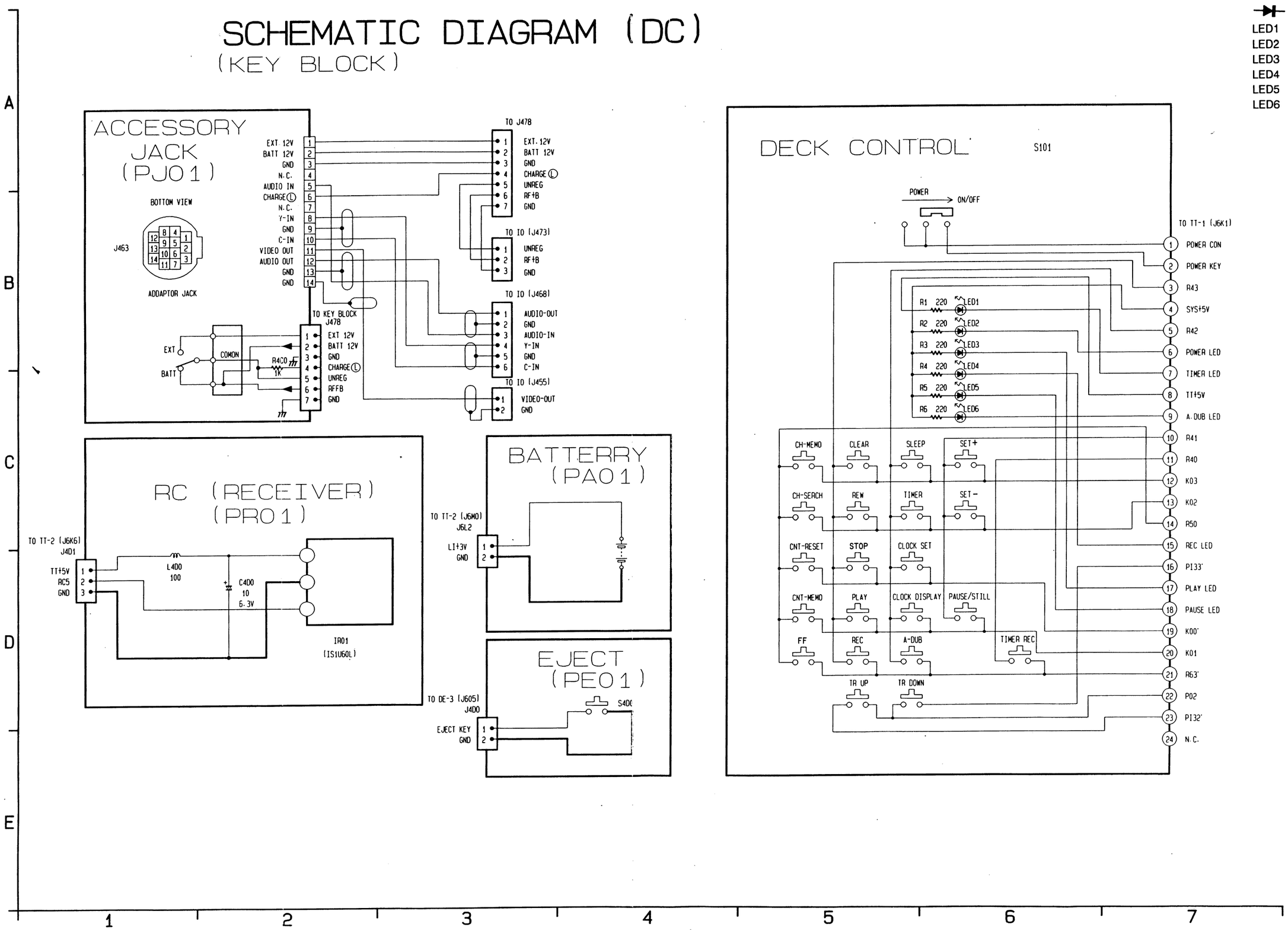

BATTERY P.C.B. DRAWING PA01

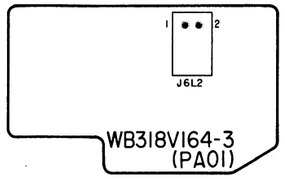

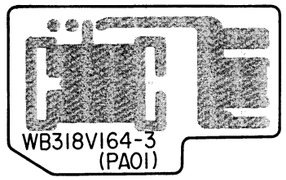

EJECT P.C.B. DRAWING PE01

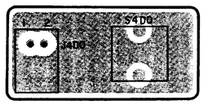

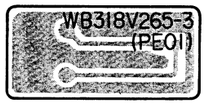

ACCESSORY JACK P.C.B. DRAWING PJ01

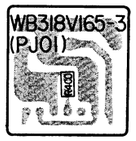

RECEIVER P.C.B. DRAWING PR01

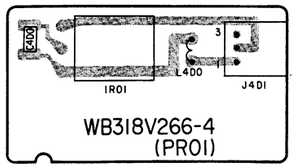

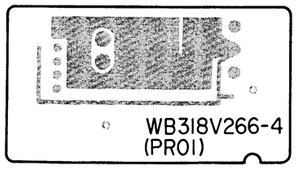

SCHEMATIC DIAGRAM (DC
(KEY BLOCK)

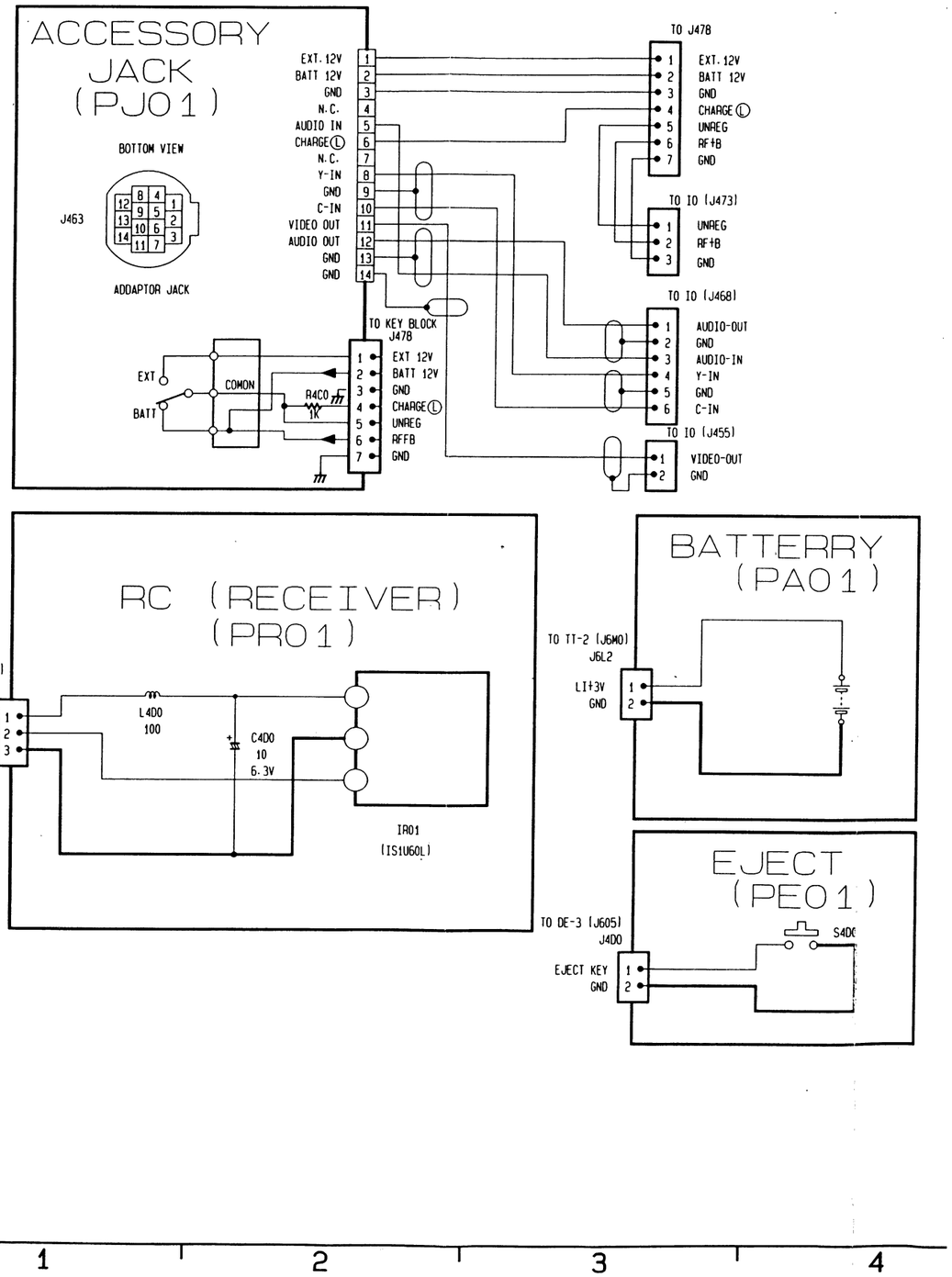

SCHEMATIC DIAGRAM (IO)
(AUDIO/VIDEO SELECTOR BLOCK)

(PV01)

AUDIO SIGNAL
VIDEO SIGNAL

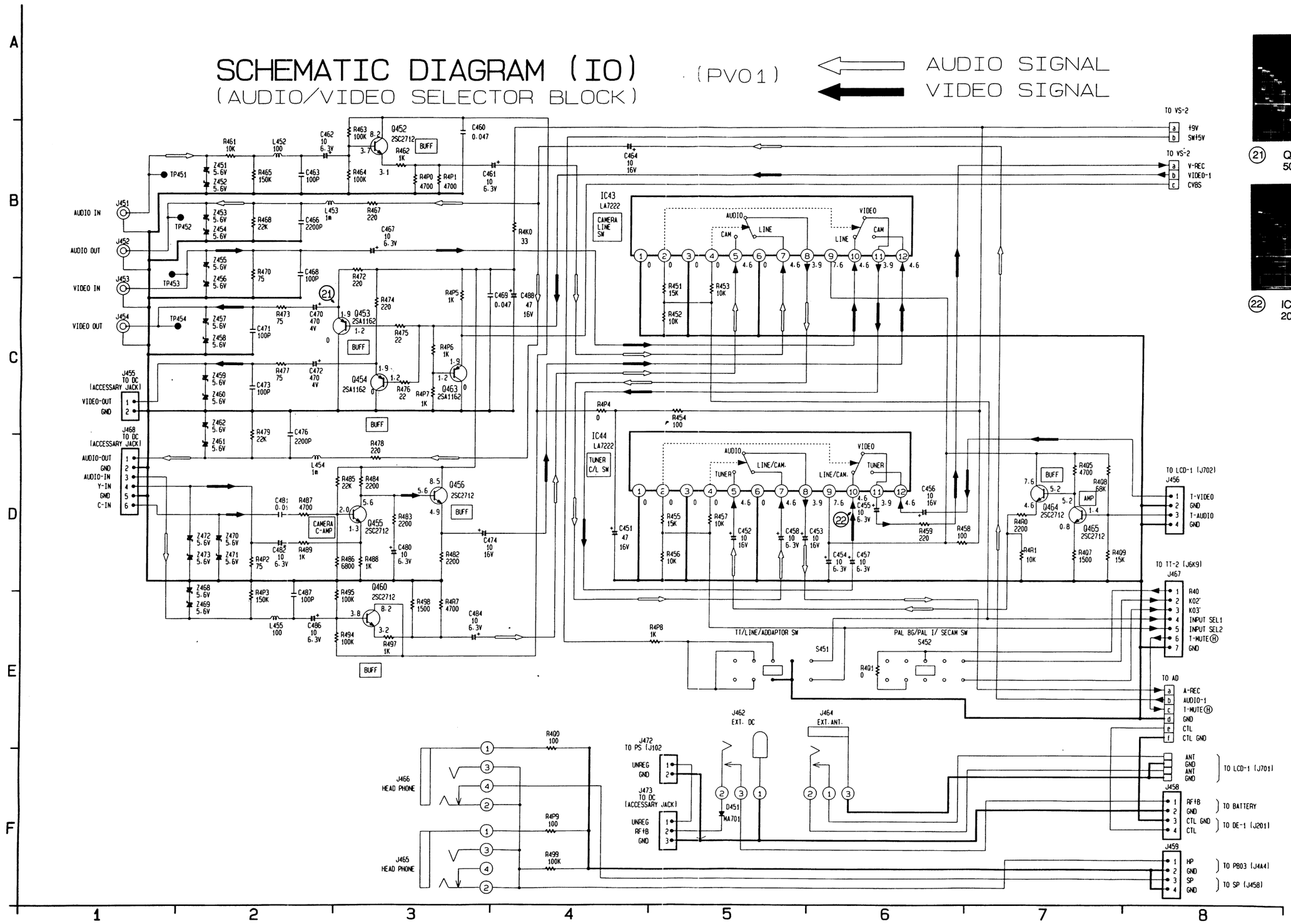

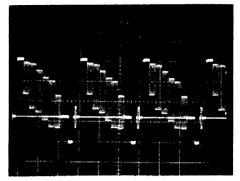

(21) Q453 Emitter
500mV/Div. 20μs/Div.

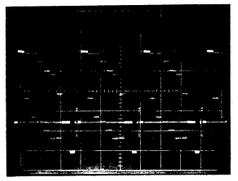

(22) IC44 Pin 10
20μs/Div. 200mV/Div.

Q452	B3
Q453	C3
Q454	C3
Q455	D3
Q456	D3
Q460	E3
Q463	C3
Q464	D7
Q465	D7

IC43	B4
IC44	D4

D451	F5
Z451	B2
Z452	B2
Z453	B2
Z454	B2
Z455	B2
Z456	C2
Z457	C2
Z458	C2
Z459	C2
Z460	C2
Z461	D2
Z462	C2
Z468	D2
Z469	E2
Z470	D2
Z471	D2
Z472	D2
Z473	D2

TEST POINTS

TP451	B1
TP452	B1
TP453	C1
TP454	C1

IC43 (LA7222)

	1	2	3	4	5	6	7	8	9	10	11	12
MODE												
REC	0	0	0	0	4.6	0	4.6	3.9	7.6	4.6	3.9	4.6
PLAY	0	0	0	0	4.6	0	4.6	3.9	7.6	4.6	3.9	4.6
STOP	0	0	0	0	4.6	0	4.6	3.9	7.6	4.6	3.9	4.6

IC44 (LA7222)

	1	2	3	4	5	6	7	8	9	10	11	12
MODE												
REC	0	0	0	0	4.6	0	4.6	3.9	7.6	4.6	3.9	4.6
PLAY	0	0	0	0	4.6	0	4.6	3.9	7.6	4.6	3.9	4.6
STOP	0	0	0	0	4.6	0	4.6	3.9	7.6	4.6	3.9	4.6

	Q452			Q453			Q454			Q455			Q456		
	E	B	C	E	B	C	E	B	C	E	B	C	E	B	C
MODE															
REC	3.1	3.7	8.2	1.9	1.2	0	1.9	1.2	0	1.3	2.0	5.6	4.9	5.6	8.5
PLAY	3.1	3.7	8.2	2.4	1.7	0	2.4	1.7	0	1.3	2.0	5.6	4.9	5.6	8.5
STOP	3.1	3.7	8.2	2.0	1.3	0	2.0	1.3	0	1.3	2.0	5.6	4.9	5.6	8.5

	Q460			Q463			Q464			Q465		
	E	B	C	E	B	C	E	B	C	E	B	C
MODE												
REC	3.2	3.8	8.2	1.9	1.2	0	4.6	5.2	7.6	0.8	1.4	5.2
PLAY	3.2	3.8	8.2	2.4	1.7	0	4.6	5.2	7.6	0.8	1.4	5.2
STOP	3.2	3.8	8.2	1.9	1.2	0	4.6	5.2	7.6	0.8	1.4	5.2

SCHEMATIC DIAGRAM (AD)
(NORMAL AUDIO BLOCK)

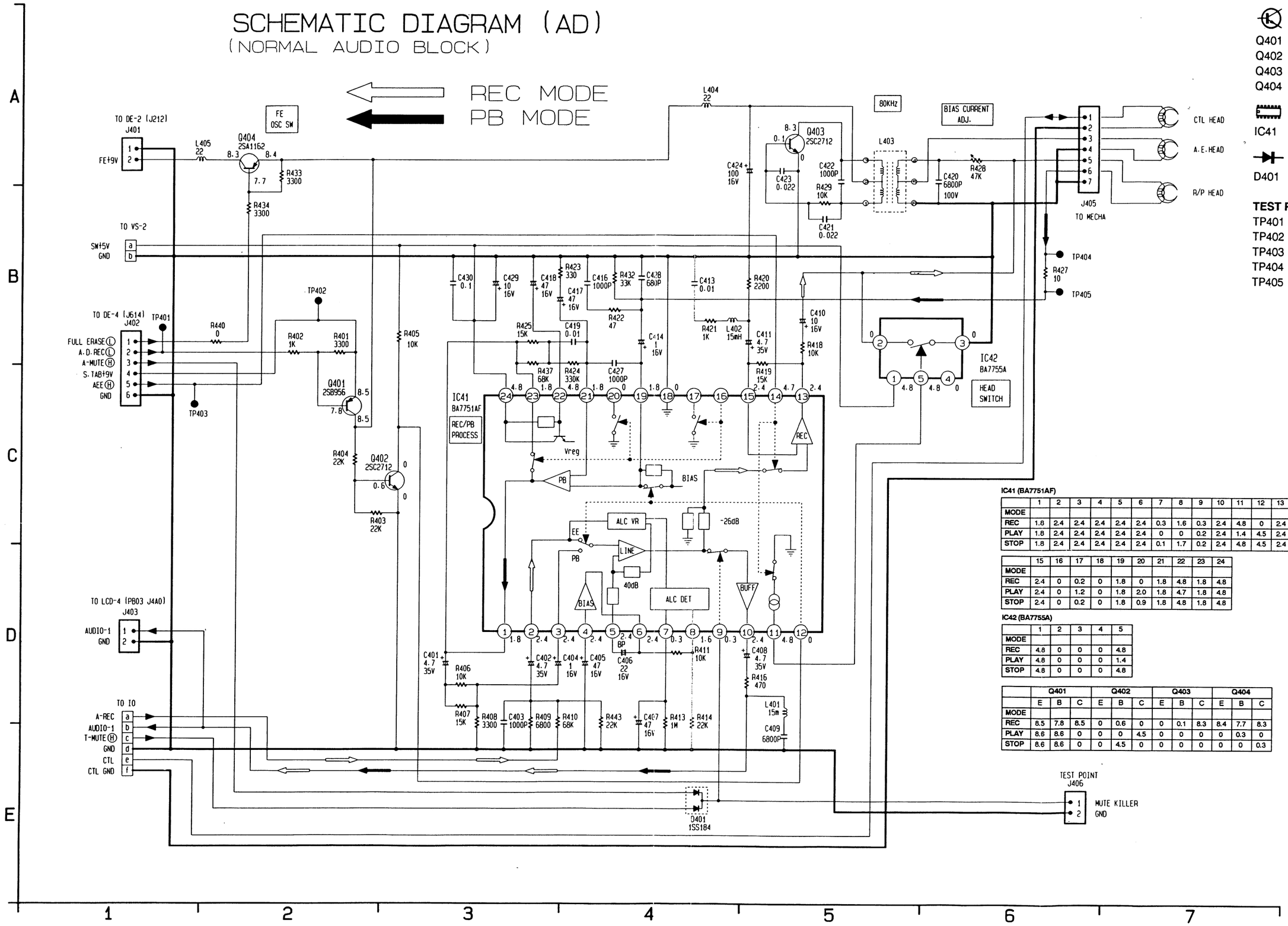

Q401 C2
Q402 C2
Q403 A5
Q404 A2

IC41 C3

D401 E4

TEST POINTS

TP401 B1
TP402 B2
TP403 C1
TP404 B6
TP405 B6

IC41 (BA7751AF)

	1	2	3	4	5	6	7	8	9	10	11	12	13	14
MODE														
REC	1.8	2.4	2.4	2.4	2.4	2.4	0.3	1.6	0.3	2.4	4.8	0	2.4	4.7
PLAY	1.8	2.4	2.4	2.4	2.4	2.4	0	0	0.2	2.4	1.4	4.5	2.4	0.1
STOP	1.8	2.4	2.4	2.4	2.4	2.4	0.1	1.7	0.2	2.4	4.8	4.5	2.4	4.7

	15	16	17	18	19	20	21	22	23	24
MODE										
REC	2.4	0	0.2	0	1.8	0	1.8	4.8	1.8	4.8
PLAY	2.4	0	1.2	0	1.8	2.0	1.8	4.7	1.8	4.8
STOP	2.4	0	0.2	0	1.8	0.9	1.8	4.8	1.8	4.8

IC42 (BA7755A)

	1	2	3	4	5
MODE					
REC	4.8	0	0	0	4.8
PLAY	4.8	0	0	0	1.4
STOP	4.8	0	0	0	4.8

	Q401			Q402			Q403			Q404		
	E	B	C	E	B	C	E	B	C	E	B	C
MODE												
REC	8.5	7.8	8.5	0	0.6	0	0	0.1	8.3	8.4	7.7	8.3
PLAY	8.6	8.6	0	0	0	4.5	0	0	0	0	0.3	0
STOP	8.6	8.6	0	0	4.5	0	0	0	0	0	0	0.3

CABINET EXPLODED VIEW (TOP)

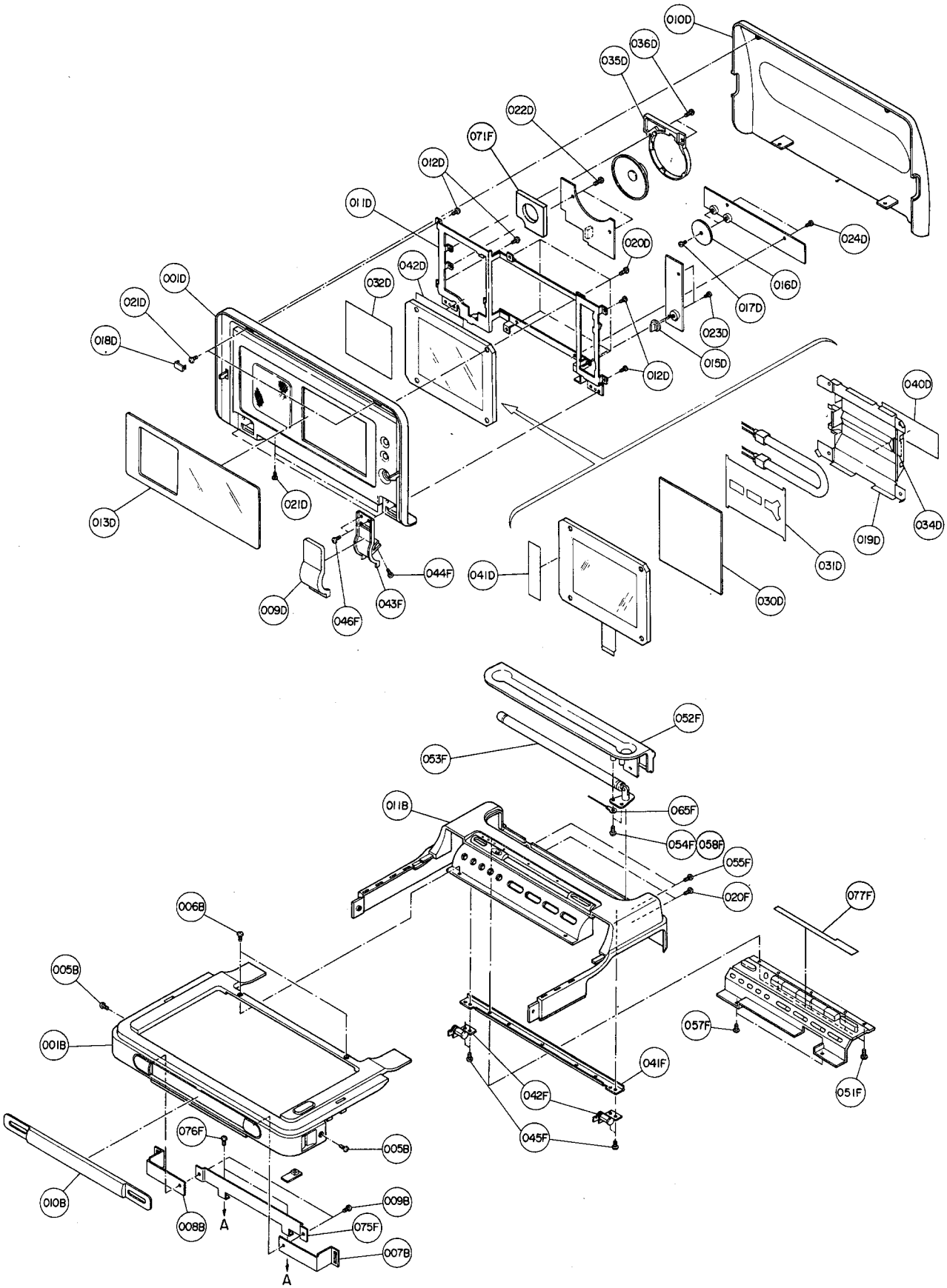

CABINET EXPLODED VIEW (BOTTOM)

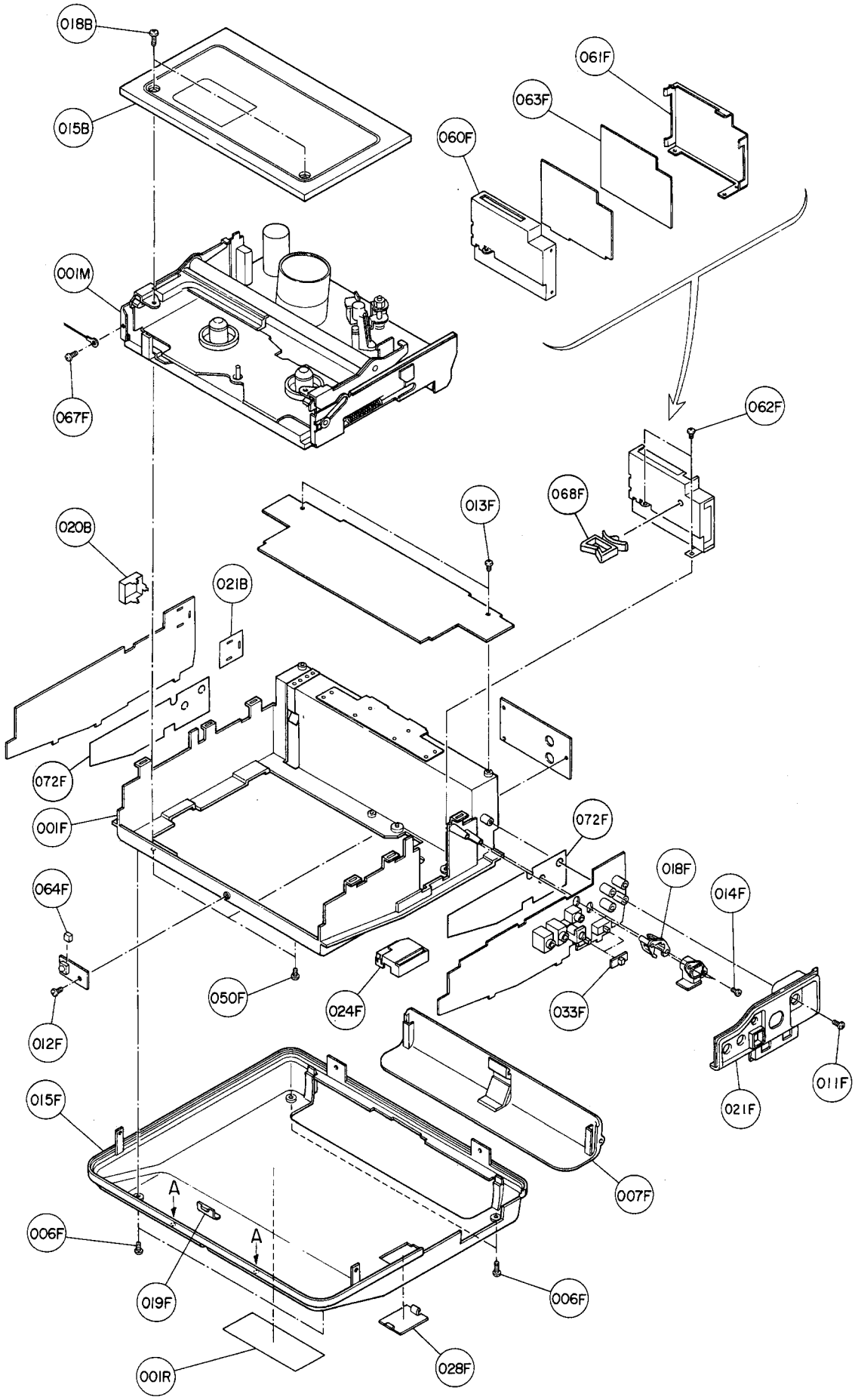

TAPE DECK EXPLODED VIEW (TOP)

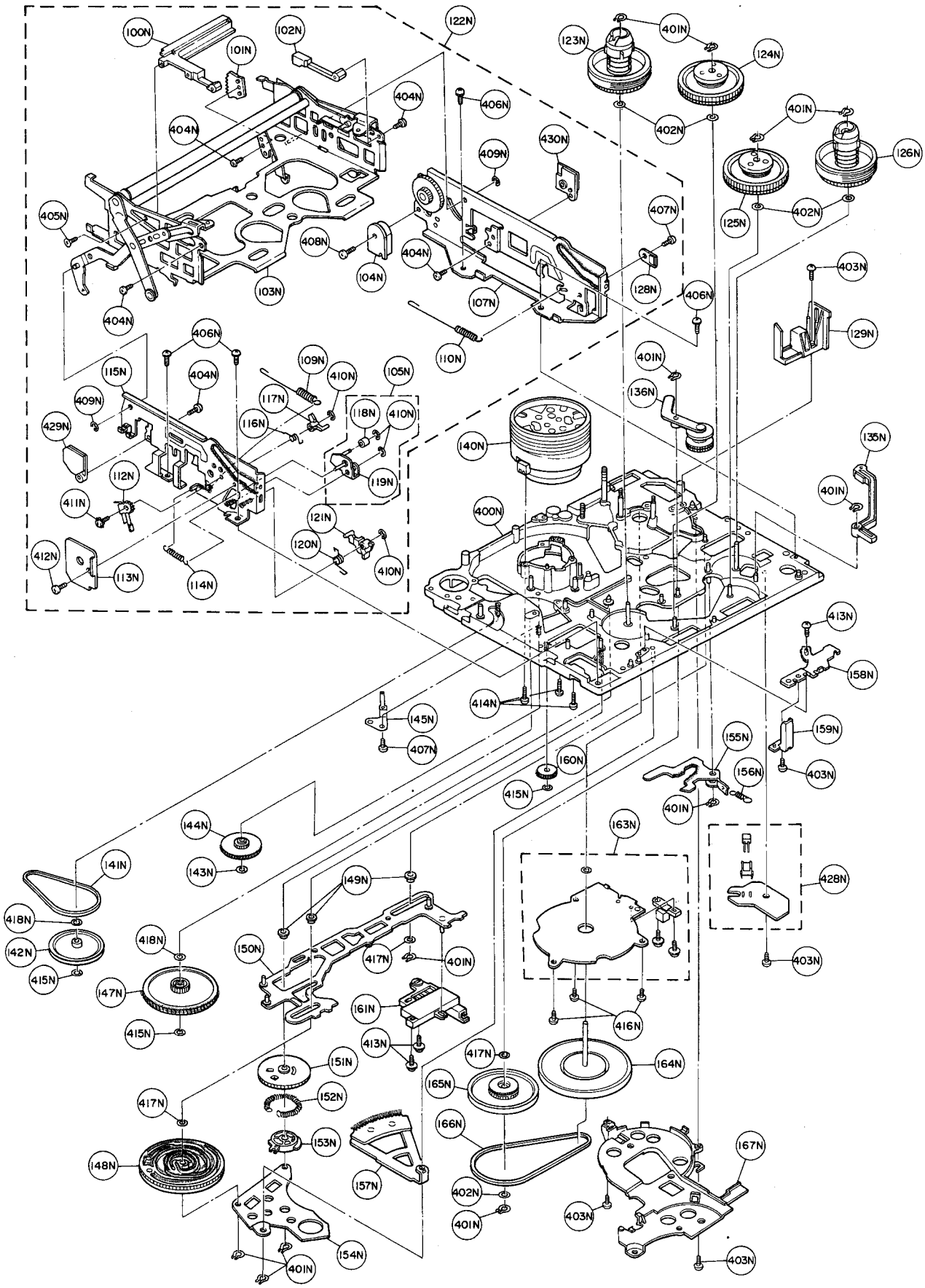

Note: Lubrication Points: When the shaded parts are replaced, apply the recommended lubricants for better maintenance of the unit.

Lubricant:	Molytone Grease
Availability:	Avail. from factory
Part No.	1714550019

TAPE DECK EXPLODED VIEW (BOTTOM)

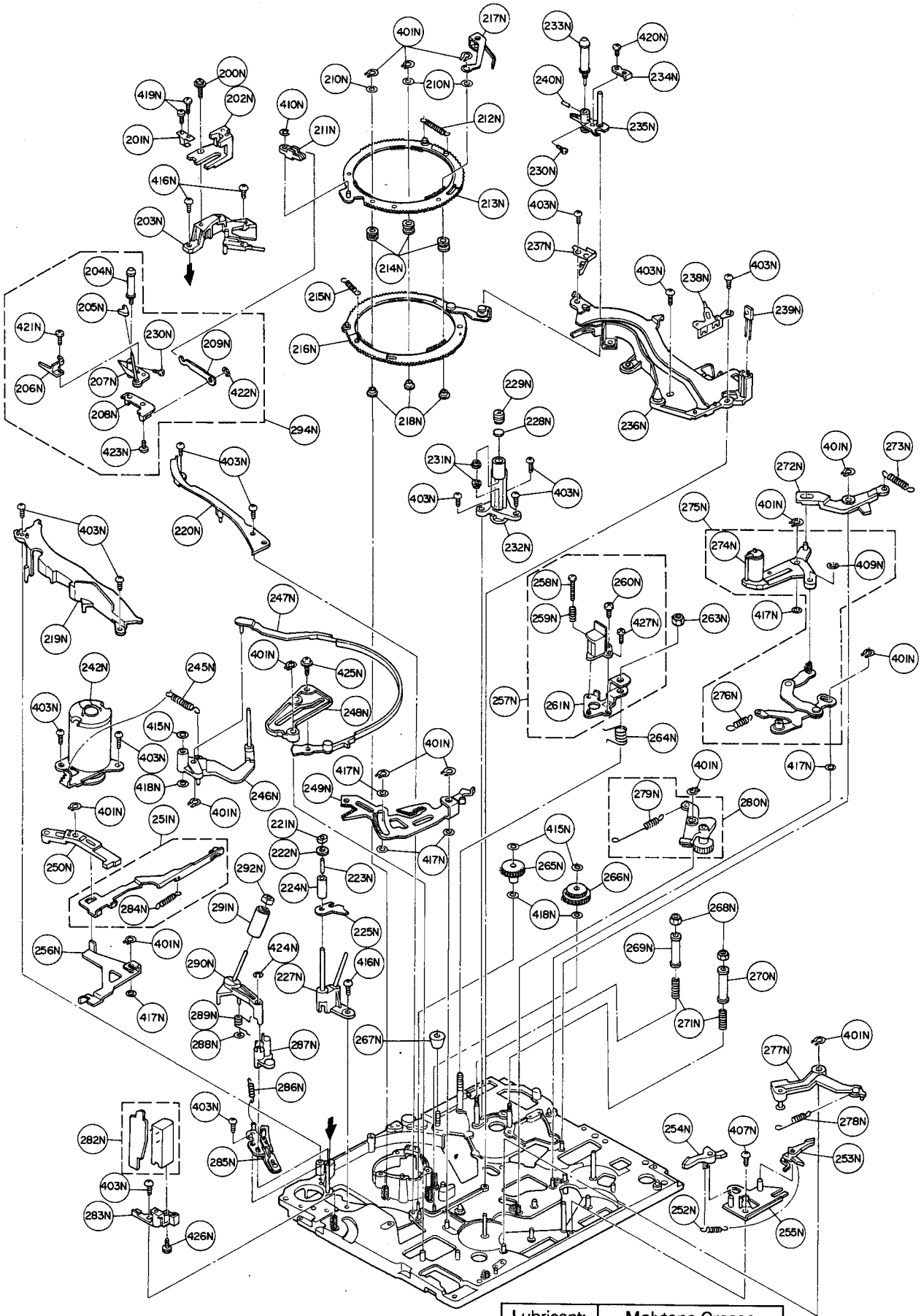

Note: Lubrication Points: When the shaded parts are replaced, apply the recommended lubricants for better maintenance of the unit.

Lubricant:	Molytone Grease
Availability:	Avail. from factory
Part No.	1714550019

ELECTRICAL REPLACEMENT PARTS LIST

CONTENTS **Page**

POWER SUPPLY	3-6
SERVO/DRIVER/SYSTEM CONTROL	3-7
TIMER/TUNING	3-9
RF/IF, CHROMA DECODER, RF/IF/CHROMA/POWER SUPPLY	3-11
BACK LIGHT/AMP/CONTROL	3-15
CHROMINANCE/LUMINANCE	3-16
NORMAL AUDIO	3-18
AUDIO/VIDEO SELECTOR	3-19
HEAD AMP	3-20
KEY BLOCK	3-22
VARIOUS	3-22
MECHANICAL PARTS	3-23

POWER SUPPLY

C101	4822 122 32669	47000 pF
C102	4822 122 32669	47000 pF
C103	4822 122 32672	1 µF 16V
C104	4822 122 32672	1 µF 16V
C105	4822 122 33712	470 pF
C106	4822 122 32694	47 pF
C107	4822 122 32693	33 pF
C108	4822 122 33135	220 pF
C109	4822 122 32703	330 pF
C110	4822 122 32672	1 µF 16V
C111	4822 124 22728	100 µF 16V
C112	4822 124 23463	220 µF 10V
C113	4822 124 23463	220 µF 10V
C114	4822 122 32669	47000 pF
C115	4822 122 32701	0.022 µF
C116	4822 124 23463	220 µF 10V
C117	4822 124 23463	220 µF 10V
C118	4822 122 32701	0.022 µF
C119	4822 122 32701	0.022 µF
C120	4822 124 23463	220 µF 10V
C121	4822 124 22728	100 µF 16V
C122	4822 124 22728	100 µF 16V
C123	4822 124 22728	100 µF 16V
C124	4822 122 33714	0.1 µF 25V
C125	4822 124 22727	47 µF 16V

D101	4822 130 81166	1SS184

F101 ⚠	4822 253 30333	Fuse 1.25A

IC11	4822 209 82947	BA6149LS
IC12	4822 209 83188	UN102

J102	4822 265 20361	2 Pin Plug
J103	4822 265 30857	4 Pin Jack
J104	4822 265 30858	3 Pin Jack
J105	4822 267 31204	2 Pin Jack

L101	4822 157 62727	150 µH
L102	4822 157 62733	33 µH
L103	4822 157 62737	470 µH
L104	4822 157 62738	50 µH
L105	4822 157 62735	330 µH
L106	4822 157 62745	560 µH
L107	4822 157 62738	50 µH
L108	4822 157 62738	50 µH

PR11	4822 252 20266	CURRENT PROTECTOR 1A
PR12	4822 252 51083	CURRENT PROTECTOR 0.8A

Q101	4822 130 60335	2SA1037 (K)
Q102	4822 130 60564	2SB956
Q103	4822 130 43406	2SD1328 (R)
Q104	4822 130 60564	2SB956
Q105	4822 130 43398	2SC2712 (GR)
Q107	4822 130 61884	RN1404
Q108	4822 130 43406	2SD1328(R)

R101	4822 051 30222	2.2 kΩ 1/16W
R102	4822 051 30103	10 kΩ 1/16W
R103	4822 051 30103	10 kΩ 1/16W
R104	4822 051 30222	2.2 kΩ 1/16W
R105	4822 051 30334	330 kΩ 1/16W
R106	4822 051 30154	150 kΩ 1/16W
R107	4822 051 30334	330 kΩ 1/16W
R108	4822 051 30683	68 kΩ 1/16W
R109	4822 051 30103	10 kΩ 1/16W
R110	4822 051 30472	4.7 kΩ 1/16W
R111	4822 051 30471	470 Ω 1/16W
R112	4822 051 30222	2.2 kΩ 1/16W
R113	4822 111 91014	1.2 kΩ 1/8W
R114	4822 051 30471	470 Ω 1/16W
R115	4822 051 30222	2.2 kΩ 1/16W
R116	4822 111 91014	1.2 kΩ 1/8W
R117	4822 051 30471	470 Ω 1/16W
R118	4822 051 30222	2.2 kΩ 1/16W
R119	4822 111 91021	1.5 kΩ 1/8W
R120	4822 051 30471	470 Ω 1/16W
R121	4822 051 30222	2.2 kΩ 1/16W
R122	4822 111 91021	1.5 kΩ 1/8W
R123	4822 051 30471	470 Ω 1/16W
R124	4822 051 30222	2.2 kΩ 1/16W
R125	4822 111 91014	1.2 kΩ 1/8W
R126	4822 051 30471	470 Ω 1/16W
R127	4822 051 30222	2.2 kΩ 1/16W
R128	4822 111 91061	820 Ω 1/8W
R129	4822 051 30223	22 kΩ 1/16W
R130	4822 051 30104	100 kΩ 1/16W
R131	4822 100 11636	Trimmer 4.7 kΩ 1/10W
R132	4822 051 30223	22 kΩ 1/16W
R133	4822 051 30104	100 kΩ 1/16W
R134	4822 051 30681	680 Ω 1/16W
R135	4822 051 30102	1 kΩ 1/16W
R136	4822 051 30102	1 kΩ 1/16W
R137	4822 051 30472	4.7 kΩ 1/16W
R140	4822 051 30473	47 kΩ 1/16W
R141	4822 100 11636	Trimmer 4.7 kΩ 1/10W
R142	4822 051 30223	22 kΩ 1/16W
R143	4822 051 30104	100 kΩ 1/16W
R144	4822 111 90976	1 kΩ 1/8W
R145	4822 111 90976	1 kΩ 1/8W
R146	4822 051 30103	10 kΩ 1/16W
R147	4822 051 30103	10 kΩ 1/16W
R148	4822 051 30681	680 Ω 1/16W

X101	4822 242 73834	815 kHz Ceramic Resonator

SERVO/DRIVER/SYSTEM CONTROL

C201	4822 124 23464	1 µF 50V
C202	4822 122 32665	0.001 µF
C203	4822 122 32665	0.001 µF
C204	4822 124 23464	1 µF 50V
C205	4822 122 33712	470 pF
C206	4822 124 22727	47µF 16V
C207	4822 122 32672	1 µF 16V
C208	4822 122 32672	1 µF 16V
C209	4822 124 22727	47 µF 16V
C210	4822 124 22727	47 µF 16V
C211	4822 122 32669	47000 pF
C212	4822 122 33689	0.01 µF
C213	4822 122 32672	1 µF 16V
C214	4822 124 22727	47 µF 16V
C215	4822 122 32686	100 pF
C216	4822 124 22727	47 µF 16V
C217	4822 122 33714	0.1 µF 25V
C218	4822 122 32686	100 pF
C219	4822 122 32686	100 pF
C221	4822 122 33689	0.01 µF
C222	4822 122 32669	47000 pF
C223	4822 122 32698	4700 pF
C224	4822 124 22727	47 µF 16V
C225	4822 124 22727	47 µF 16V
C226	4822 122 32669	47000 pF
C227	4822 124 22727	47 µF 16V
C228	4822 124 22727	47 µF 16V
C229	4822 122 32697	2200 pF
C230	4822 122 32665	0.001 µF
C231	4822 122 32669	47000 pF
C232	4822 124 23467	2.2 µF 35V
C233	4822 122 32686	100 pF
C234	4822 122 32665	0.001 µF
C235	4822 122 32672	1 µF 16V
C236	4822 124 22727	47 µF 16V
C237	4822 124 22727	47 µF 16V
C238	4822 124 22727	47 µF 16V
C239	4822 124 22728	100 µF 16V
C240	4822 122 33689	0.01 µF
C241	4822 122 32672	1 µF 16V
C242	4822 122 32672	1 µF 16V
C243	4822 122 33689	0.01 µF
C244	4822 124 41839	10 µF 6.3V
C245	4822 122 33714	0.1 µF 25V
C246	5322 121 42491	0.047 µF 50V
C247	4822 122 33689	0.01 µF
C248	4822 122 32672	1 µF 16V
C249	4822 122 32693	33 pF
C250	4822 122 32693	33 pF
C251	4822 124 22727	47 µF 16V
C252	4822 124 22727	47 µF 16V
C253	4822 122 32672	1 µF 16V
C254	4822 122 32672	1 µF 16V
C255	4822 122 32672	1 µF 16V
C256	4822 124 22727	47 µF 16V
C257	4822 122 32698	4700 pF
C258	4822 122 32698	4700 pF
C259	4822 122 32698	4700 pF
C260	4822 124 23127	0.47 µF 35V
C261	4822 124 23127	0.47 µF 35V
C262	4822 124 22726	4.7 µF 35V
C263	4822 124 22726	4.7 µF 35V
C264	4822 122 32669	47000 pF
C265	4822 122 33689	0.01 µF
C266	4822 122 32669	47000 pF
C267	4822 122 33689	0.01 µF
C268	4822 122 32669	47000 pF
C269	4822 122 33689	0.01 µF
C270	4822 124 22728	100 µF 16V
C271	4822 124 22727	47 µF 16V
C272	4822 122 32669	47000 pF
C273	4822 124 22727	47 µF 16V
C274	4822 122 32672	1 µF 16V
C275	4822 122 33714	0.1 µF 25V
C276	4822 124 22726	4.7 µF 35V
C601	4822 124 22727	47 µF 16V
C602	4822 122 33714	0.1 µF 25V
C603	4822 124 22726	4.7 µF 35V
C604	4822 122 33714	0.1 µF 25V
C605	4822 122 32672	1 µF 16V
C606	4822 124 23464	1 µF 50V
C607	4822 122 33713	6800 pF
C608	4822 122 33714	0.1 µF 25V
C609	4822 124 22727	47 µF 16V
C610	4822 122 33714	0.1 µF 25V
C611	4822 122 33714	0.1 µF 25V
C612	4822 124 41839	10 µF 6.3V
C621	4822 122 32703	330 pF
C622	4822 122 33132	22 pF
C623	4822 122 32693	33 pF
C624	4822 122 32693	33 pF
C625	4822 122 33689	0.01 µF
C626	4822 124 23464	1 µF 50V
C627	4822 122 33714	0.1 µF 25V
C628	4822 122 33689	0.01 µF
C629	4822 122 33714	0.1 µF 25V
C632	4822 124 23463	220 µF 10V
C633	4822 122 33714	0.1 µF 25V
C634	4822 122 32665	0.001 µF
C635	4822 122 32665	0.001 µF
C636	4822 122 33689	0.01 µF

D201	4822 130 81089	1SS226
D204	4822 130 81166	1SS184
D205	4822 130 81166	1SS184
D206	4822 130 81166	1SS184
D207	4822 130 81089	1SS226
D208	4822 130 81089	1SS226
D209	4822 130 81166	1SS184
D210	4822 130 81166	1SS184
D211	4822 130 81166	1SS184
D212	4822 130 80728	MA121
D601	4822 130 81166	1SS184
D602	4822 130 82315	1SS181
D603	4822 130 81166	1SS184
D604	4822 130 82315	1SS181
D605	4822 130 82315	1SS181
D606	4822 130 81166	1SS184
D607	4822 130 82315	1SS181
D608	4822 130 82315	1SS181
D609	4822 130 81166	1SS184
D610	4822 130 81166	1SS184
D611	4822 130 81166	1SS184
D621	4822 130 81166	1SS184
D622	4822 130 81166	1SS184
D623	4822 130 81166	1SS184
D624	4822 130 81166	1SS184
D625	4822 130 82315	1SS181
D629	4822 130 81166	1SS184

SERVO/DRIVER/SYSTEM CONTROL (continued)

IC21	4822 209 63135	MN67461VDJF µP
IC22	4822 209 61968	AN3798NS
IC23	4822 209 63136	MN1551VYJS4 µP
IC24	4822 209 71455	TA8402F
IC26	4822 209 60046	BA6432S CAP.MOTOR DRIVER
IC61	4822 209 81616	M54543L
IC62	4822 209 63134	MN15361VYF µP
IC63	4822 209 70108	BA10393F
IC64	4822 209 72842	UPD4094BG

J201	4822 267 31204	2 Pin Jack
J202	4822 267 50867	10 Pin Jack
J204	4822 265 41075	14 Pin Jack
J211	4822 267 31204	2 Pin Jack
J212	4822 267 31204	2 Pin Jack
J601	4822 265 20361	2 Pin Plug
J602	4822 265 30857	4 Pin Jack
J604	4822 265 20504	2 Pin Jack
J605	4822 267 31204	2 Pin Jack
J613	4822 267 50868	8 Pin Jack
J614	4822 265 30863	6 Pin Jack
J615	4822 265 30858	3 Pin Jack
J617	4822 265 30861	5 Pin Jack
J618	4822 265 30858	3 Pin Jack

L601	4822 157 62723	100 µH

Q204	4822 130 42733	2SA1162 (G)
Q205	4822 130 61884	RN1404
Q206	4822 130 60564	2SB956 (R)
Q207	4822 130 60564	2SB956 (R)
Q208	4822 130 60564	2SB956 (R)
Q601	4822 130 42733	2SA1162 (G)
Q602	4822 130 43398	2SC2712 (GR)
Q603	4822 130 42733	2SA1162 (G)
Q604	4822 130 61884	RN1404
Q605	4822 130 60335	2SA1037K (FR)
Q606	4822 130 61884	RN1404
Q607	4822 130 61884	RN1404
Q608	4822 130 61884	RN1404
Q609	4822 130 42733	2SA1162 (G)
Q610	4822 130 61405	2SC2411K (R)
Q611	4822 130 61537	2SC2412K (R)
Q612	4822 130 43522	2SB779
Q613	4822 130 42733	2SA1162 (G)
Q614	4822 130 42733	2SA1162 (G)
Q615	4822 130 42733	2SA1162 (G)
Q616	4822 130 42733	2SA1162 (G)
Q619	4822 130 61884	RN1404
Q621	4822 130 61884	RN1404
Q631	4822 130 61884	RN1404
Q632	4822 130 61884	RN1404
Q637	4822 130 43522	2SB779
Q638	4822 130 61884	RN1404
Q640	4822 130 61884	RN1404

R201	4822 051 30102	1 kΩ 1/16W
R202	4822 051 30472	4.7 kΩ 1/16W
R203	4822 051 30105	1 MΩ 1/16W
R207	4822 051 30221	220 Ω 1/16W
R208	4822 051 30332	3.3 kΩ 1/16W
R209	4822 051 30102	1 kΩ 1/16W
R210	4822 051 30102	1 kΩ 1/16W
R211	4822 051 30104	100 kΩ 1/16W
R212	4822 051 30104	100 kΩ 1/16W
R213	4822 051 30104	100 kΩ 1/16W
R214	4822 051 30104	100 kΩ 1/16W
R215	4822 051 30473	47 kΩ 1/16W
R216	4822 051 30154	150 kΩ 1/16W
R217	4822 051 30222	2.2 kΩ 1/16W
R218	4822 051 30333	33 kΩ 1/16W
R219	4822 051 30154	150 kΩ 1/16W
R220	4822 051 30224	220 kΩ 1/16W
R221	4822 051 30473	47 kΩ 1/16W
R222	4822 051 30103	10 kΩ 1/16W
R223	4822 051 30154	150 kΩ 1/16W
R224	4822 051 30103	10 kΩ 1/16W
R225	4822 051 30103	10 kΩ 1/16W
R227	4822 051 30103	10 kΩ 1/16W
R229	4822 051 30221	220 Ω 1/16W
R236	4822 051 30105	1 MΩ 1/16W
R237	4822 051 30103	10 kΩ 1/16W
R238	4822 051 30223	22 kΩ 1/16W
R239	4822 051 30223	22 kΩ 1/16W
R240	4822 051 30102	1 kΩ 1/16W
R241	4822 051 30223	22 kΩ 1/16W
R242	4822 051 30152	1.5 kΩ 1/16W
R243	4822 051 30332	3.3 kΩ 1/16W
R244	4822 116 82487	0 Ω 1/16W
R245	4822 051 30103	10 kΩ 1/16W
R246	4822 100 11634	Trimmer 100 kΩ 1/10W
R249	4822 051 30332	3.3 kΩ 1/16W
R250	4822 051 30102	1 kΩ 1/16W
R251	4822 051 30153	15 kΩ 1/16W
R252	4822 051 30229	22 Ω 1/16W
R253	4822 051 30229	22 Ω 1/16W
R254	4822 051 30229	22 Ω 1/16W
R255	4822 111 91007	2.2 Ω 1/8W
R256	4822 116 82712	1.8 Ω 1/8W
R257	4822 116 82712	1.8 Ω 1/8W
R258	4822 051 30103	10 kΩ 1/16W
R259	4822 051 30103	10 kΩ 1/16W
R260	4822 051 30103	10 kΩ 1/16W
R261	4822 051 30682	6.8 kΩ 1/16W
R262	4822 051 30682	6.8 kΩ 1/16W
R263	4822 051 30339	33 Ω 1/16W
R265	4822 051 30339	33 Ω 1/16W
R266	4822 051 30221	220 Ω 1/16W
R267	4822 051 30682	6.8 kΩ 1/16W
R268	4822 051 30683	68 kΩ 1/16W
R269	4822 051 30339	33 Ω 1/16W
R270	4822 051 30101	100 Ω 1/16W
R271	4822 051 30471	470 Ω 1/16W
R273	4822 116 82487	0 Ω 1/16W
R274	4822 116 82711	1Ω 1/8W
R275	4822 116 82711	1Ω 1/8W
R601	4822 051 30473	47 kΩ 1/16W
R602	4822 051 30472	4.7 kΩ 1/16W
R603	4822 051 30472	4.7 kΩ 1/16W
R604	4822 051 30473	47 kΩ 1/16W

SERVO/DRIVER/SYSTEM CONTROL (continued)

R605	4822 051 30473	47 kΩ 1/16W
R606	4822 051 30473	47 kΩ 1/16W
R607	4822 051 30473	47 kΩ 1/16W
R608	4822 051 30473	47 kΩ 1/16W
R609	4822 051 30223	22 kΩ 1/16W
R610	4822 051 30101	100 Ω 1/16W
R611	4822 051 30332	3.3 kΩ 1/16W
R612	4822 051 30682	6.8 kΩ 1/16W
R616	4822 051 30103	10 kΩ 1/16W
R617	4822 051 30103	10 kΩ 1/16W
R620	4822 051 30473	47 kΩ 1/16W
R623	4822 051 30473	47 kΩ 1/16W
R624	4822 051 30473	47 kΩ 1/16W
R625	4822 051 30103	10 kΩ 1/16W
R626	4822 111 91028	220 Ω 1/8W
R627	4822 111 91028	220 Ω 1/8W
R628	4822 051 30332	3.3 kΩ 1/16W
R629	4822 051 30333	33 kΩ 1/16W
R630	4822 051 30152	1.5 kΩ 1/16W
R631	4822 051 30152	1.5 kΩ 1/16W
R632	4822 051 30103	10 kΩ 1/16W
R633	4822 051 30103	10 kΩ 1/16W
R634	4822 051 30103	10 kΩ 1/16W
R635	4822 116 82487	0 Ω 1/16W
R640	4822 051 30473	47 kΩ 1/16W
R651	4822 051 30222	2.2 kΩ 1/16W
R652	4822 051 30103	10 kΩ 1/16W
R653	4822 100 11635	Trimmer 2.2 kΩ
R654	4822 051 30152	1.5 kΩ 1/16W
R655	4822 051 30223	22 kΩ 1/16W
R656	4822 051 30223	22 kΩ 1/16W
R657	4822 051 30223	22 kΩ 1/16W
R658	4822 051 30683	68 kΩ 1/16W
R659	4822 051 30104	100 kΩ 1/16W
R660	4822 100 11608	Trimmer 10 kΩ 1/10W
R661	4822 051 30333	33 kΩ 1/16W
R662	4822 051 30103	10 kΩ 1/16W
R663	4822 051 30334	330 kΩ 1/16W
R664	4822 051 30104	100 kΩ 1/16W
R665	4822 051 30474	470 kΩ 1/16W
R666	4822 051 30474	470 kΩ 1/16W
R667	4822 051 30154	150 kΩ 1/16W
R670	4822 051 30102	1 kΩ 1/16W
R671	4822 051 30473	47 kΩ 1/16W
R674	4822 051 30473	47 kΩ 1/16W
R675	4822 051 30222	2.2 kΩ 1/16W
R676	4822 051 30471	470 Ω 1/16W
R677	4822 051 30154	150 kΩ 1/16W
R678	4822 051 30154	150 kΩ 1/16W
R688	4822 051 30224	220 kΩ 1/16W
R689	4822 051 30224	220 kΩ 1/16W
R692	4822 051 30472	4.7 kΩ 1/16W
R693	4822 051 30472	4.7 kΩ 1/16W
R694	4822 051 30339	33 Ω 1/16W
R695	4822 051 30222	2.2 kΩ 1/16W
R696	4822 051 30473	47 kΩ 1/16W
R697	4822 051 30472	4.7 kΩ 1/16W
R698	4822 051 30473	47 kΩ 1/16W
R699	4822 051 30224	220 kΩ 1/16W
R6A0	4822 051 30224	220 kΩ 1/16W
R6A9	4822 051 30102	1 kΩ 1/16W
R6B0	4822 051 30102	1 kΩ 1/16W
R6B1	4822 051 30102	1 kΩ 1/16W
X201	4822 242 72389	3.58 MHz Crystal
X601	4822 242 73832	4.19 MHz Crystal

TIMER/TUNING

C6K0	4822 124 41839	10 µF 6.3V
C6K1	4822 122 33714	0.1 µF 25V
C6L0	4822 125 60155	Trimmer 20 pF
C6L1	4822 122 33132	22 pF
C6L2	4822 122 33714	0.1 µF 25V
C6L3	4822 124 41839	10 µF 6.3V
C6L4	4822 122 33714	0.1 µF 25V
C6L5	4822 122 32921	150 pF
C6L6	4822 122 33714	0.1 µF 25V
C6L7	4822 124 22727	47 µF 16V
C6L8	4822 122 32672	1 µF 16V
C6L9	4822 122 33129	10 pF
D6K1	4822 130 82315	1SS181
D6K2	4822 130 82315	1SS181
D6K3	4822 130 82315	1SS181
D6K4	4822 130 81166	1SS184
D6K5	4822 130 81166	1SS184
D6K6	4822 130 82315	1SS181
D6K7	4822 130 82315	1SS181
D6K8	4822 130 81166	1SS184
D6L1	4822 130 81166	1SS184
D6L2	4822 130 82315	1SS181
D6L5	4822 130 81166	1SS184
D6L6	4822 130 81166	1SS184
D6L7	4822 130 81166	1SS184
D6L8	4822 130 81166	1SS184
D6L9	4822 130 81166	1SS184
D6M0	4822 130 81166	1SS184
D6M1	4822 130 82315	1SS181
D6M2	4822 130 82315	1SS181
D6M3	4822 130 81166	1SS184
D6M4	4822 130 82315	1SS181
IC6K	4822 209 63157	TMP47C200AF µP
IC6L	4822 209 51935	BR93C46F
IC6M	4822 209 63154	UPD4990AG
IC6N	4822 209 63158	TMP47C834F µP
IC6P	4822 209 61645	M51951AML
IC6Q	4822 209 61645	M51951AML
IC6R	4822 209 63152	S8052ALB
J6K3	4822 265 30858	3 Pin Jack
J6K4	4822 267 31204	2 Pin Jack
J6K6	4822 265 30858	3 Pin Jack

TIMER/TUNING (continued)

J6K8	4822 265 30857	4 Pin Jack
J6K9	4822 265 41073	7 Pin Jack
J6L2	4822 265 20504	2 Pin Jack
J6M0	4822 267 31204	2 Pin Jack
J6N0	4822 265 20504	2 Pin Jack

L6K0	4822 157 62723	100 µH
L6K1	4822 157 62723	100 µH

Q6K0	4822 130 42733	2SA1162 (G)
Q6K1	4822 130 42733	2SA1162 (G)
Q6K2	4822 130 42733	2SA1162 (G)
Q6K3	4822 130 42733	2SA1162 (G)
Q6K4	4822 130 42733	2SA1162 (G)
Q6K5	4822 130 42733	2SA1162 (G)
Q6K6	4822 130 42733	2SA1162 (G)
Q6K7	4822 130 42733	2SA1162 (G)
Q6K8	4822 130 42733	2SA1162 (G)
Q6K9	4822 130 42733	2SA1162 (G)
Q6L0	4822 130 42733	2SA1162 (G)
Q6L1	4822 130 61884	RN1404
Q6L2	4822 130 43398	2SC2712 (GR)
Q6L3	4822 130 43398	2SC2712 (GR)
Q6L4	4822 130 61884	RN1404
Q6L5	4822 130 61884	RN1404
Q6L6	4822 130 61884	RN1404
Q6L7	4822 130 61884	RN1404
Q6L8	4822 130 42733	2SA1162 (G)
Q6L9	4822 130 61426	2SK208 (Y)
Q6M0	4822 130 43398	2SC2712 (GR)

R6K0	4822 051 30103	10 kΩ 1/16W
R6K1	4822 051 30103	10 kΩ 1/16W
R6K4	4822 051 30103	10 kΩ 1/16W
R6K5	4822 051 30103	10 kΩ 1/16W
R6K6	4822 051 30103	10 kΩ 1/16W
R6K7	4822 051 30103	10 kΩ 1/16W
R6L3	4822 051 30103	10 kΩ 1/16W
R6L4	4822 051 30103	10 kΩ 1/16W
R6L5	4822 051 30222	2.2 kΩ 1/16W
R6L6	4822 051 30103	10 kΩ 1/16W
R6L7	4822 051 30103	10 kΩ 1/16W
R6L8	4822 051 30103	10 kΩ 1/16W
R6L9	4822 051 30103	10 kΩ 1/16W
R6M0	4822 051 30103	10 kΩ 1/16W
R6M1	4822 051 30103	10 kΩ 1/16W
R6M2	4822 051 30103	10 kΩ 1/16W
R6M3	4822 051 30103	10 kΩ 1/16W
R6M4	4822 051 30103	10 kΩ 1/16W
R6M5	4822 051 30103	10 kΩ 1/16W
R6M6	4822 051 30103	10 kΩ 1/16W
R6M8	4822 051 30103	10 kΩ 1/16W
R6M9	4822 051 30103	10 kΩ 1/16W
R6N0	4822 051 30473	47 kΩ 1/16W
R6N1	4822 051 30473	47 kΩ 1/16W
R6N2	4822 051 30105	1 MΩ 1/16W
R6N3	4822 051 30102	1 kΩ 1/16W
R6N4	4822 051 30103	10 kΩ 1/16W
R6N5	4822 051 30105	1 MΩ 1/16W
R6N6	4822 051 30103	10 kΩ 1/16W
R6N7	4822 051 30103	10 kΩ 1/16W
R6N8	4822 051 30103	10 kΩ 1/16W
R6N9	4822 051 30103	10 kΩ 1/16W
R6P0	4822 051 30333	33 kΩ 1/16W
R6P1	4822 051 30333	33 kΩ 1/16W
R6P2	4822 051 30333	33 kΩ 1/16W
R6P3	4822 051 30473	47 kΩ 1/16W
R6P4	4822 051 30473	47 kΩ 1/16W
R6P5	4822 051 30473	47 kΩ 1/16W
R6P6	4822 051 30223	22 kΩ 1/16W
R6P7	4822 051 30223	22 kΩ 1/16W
R6P8	4822 051 30103	10 kΩ 1/16W
R6P9	4822 051 30103	10 kΩ 1/16W
R6Q0	4822 051 30103	10 kΩ 1/16W
R6Q1	4822 051 30103	10 kΩ 1/16W
R6Q2	4822 051 30473	47 kΩ 1/16W
R6Q3	4822 051 30473	47 kΩ 1/16W
R6Q4	4822 051 30103	10 kΩ 1/16W
R6Q5	4822 051 30103	10 kΩ 1/16W
R6Q8	4822 051 30222	2.2 kΩ 1/16W
R6Q9	4822 051 30103	10 kΩ 1/16W
R6R3	4822 051 30103	10 kΩ 1/16W
R6R4	4822 051 30103	10 kΩ 1/16W
R6R5	4822 051 30103	10 kΩ 1/16W
R6R6	4822 051 30103	10 kΩ 1/16W
R6R8	4822 051 30683	68 kΩ 1/16W

X6K0	4822 242 72223	4 MHz Ceramic Resonator
X6K1	4822 242 72236	32.768 kHz Crystal
X6K2	4822 242 72223	4 MHz Ceramic Resonator
X6K3	4822 242 72592	5.56 MHz Ceramic Resonator

RF/IF, CHROMA DECODER, RF/IF/CHROMA/POWER SUPPLY

C1A0	4822 122 32701	0.022 µF
C1A1	4822 122 32701	0.022 µF
C1A2	4822 122 33689	0.01 µF
C1A3	4822 122 32669	0.047 µF
C1A4	4822 124 22727	47 µF 16V
C1A5	4822 124 41841	4.7 µF 6.3V
C1A6	4822 122 32697	2200 pF
C1A7	4822 124 22728	100 µF 16V
C1A8	4822 124 22728	100 µF 16V
C1B0	4822 124 22726	4.7 µF 35V
C1B1	4822 124 22726	4.7 µF 35V
C1B2	4822 124 22727	47 µF 16V
C1B3	4822 124 22727	47 µF 16V
C1B4	4822 124 22728	100 µF 16V
C1B5	4822 124 22728	100 µF 16V
C1B6	4822 124 22728	100 µF 16V
C1B7	4822 124 22728	100 µF 16V
C1B8	4822 124 22727	47 µF 16V
C1B9	4822 124 22727	47 µF 16V
C1C0	4822 124 22726	4.7 µF 35V
C1C1	4822 124 22726	4.7 µF 35V
C701	4822 124 22727	47 µF 16V
C702	4822 122 32672	1 µF 16V
C703	4822 122 33714	0.1 µF 25V
C704	4822 122 32843	0.22 µF
C705	4822 122 33714	0.1 µF 25V
C706	4822 122 33714	0.1 µF 25V
C707	4822 122 33714	0.1 µF 25V
C708	4822 124 41839	10 µF 6.3V
C709	4822 122 33689	0.01 µF
C710	4822 122 33714	0.1 µF 25V
C711	4822 122 32665	0.001 µF
C712	4822 124 41839	10 µF 6.3V
C713	4822 124 41839	10 µF 6.3V
C714	4822 124 22727	47 µF 16V
C715	4822 122 33689	0.01 µF
C716	4822 122 33689	0.01 µF
C717	4822 122 33714	0.1 µF 25V
C718	4822 122 33714	0.1 µF 25V
C719	4822 122 33129	10 pF
C720	4822 122 33689	0.01 µF
C721	4822 122 33689	0.01 µF
C722	4822 122 32697	2200 pF
C723	4822 124 23127	0.47 µF 35V
C724	4822 124 23127	0.47 µF 35V
C725	4822 122 32669	47000 pF
C726	4822 122 32694	47 pF
C727	4822 122 32665	0.001 µF
C728	4822 122 32665	0.001 µF
C731	4822 122 33714	0.1 µF 25V
C732	4822 122 32686	100 pF
C733	4822 122 33689	0.01 µF
C734	4822 122 33714	0.1 µF 25V
C735	4822 122 32672	1 µF 16V
C736	4822 122 33714	0.1 µF 25V
C737	4822 122 33714	0.1 µF 25V
C738	4822 124 41839	10 µF 6.3V
C739	4822 122 33714	0.1 µF 25V
C740	4822 122 33714	0.1 µF 25V
C741	4822 124 41841	4.7 µF 6.3V
C742	4822 122 33689	0.01 µF
C743	4822 122 32843	0.22 µF
C745	4822 122 32693	33 pF
C746	4822 122 33129	10 pF
C747	4822 125 60155	20 pF
C748	4822 122 32694	47 pF
C750	4822 122 32693	33 pF
C751	4822 122 33129	10 pF
C752	4822 125 60155	20 pF
C755	4822 124 41839	10 µF 6.3V
C756	4822 124 41839	10 µF 6.3V
C761	4822 122 33689	0.01 µF
C762	4822 122 33689	0.01 µF
C763	4822 122 33689	0.01 µF
C770	4822 126 10006	7 pF
C772	4822 122 32694	47 pF
C773	4822 122 33689	0.01 µF
C774	4822 122 33689	0.01 µF
C775	4822 122 33689	0.01 µF
C776	4822 122 33689	0.01 µF
C777	4822 122 33689	0.01 µF
C778	4822 124 22727	47 µF 16V
C779	4822 122 32672	1 µF 16V
C780	4822 122 33714	0.1 µF 25V
C781	4822 124 41839	10 µF 6.3V
C782	4822 122 33714	0.1 µF 25V
C783	4822 122 33714	0.1 µF 25V
C784	4822 124 41841	4.7 µF 6.3V
C785	4822 122 33689	0.01 µF
C786	4822 122 33714	0.1 µF 25V
C787	4822 122 33689	0.01 µF
C788	4822 122 33709	3 pF
C789	4822 122 33689	0.01 µF
C790	4822 122 33714	0.1 µF
C792	4822 122 33709	3 pF
C793	4822 122 32672	1 µF 16V
C8A2	4822 122 32672	1 µF 16V
C8A3	4822 122 33138	680 pF
C8A4	4822 122 33129	10 pF
C8A5	4822 122 33132	22 pF
C8A7	4822 122 32695	68 pF
C8A8	4822 122 33689	0.01 µF
C8A9	4822 122 33689	0.01 µF
C8B0	4822 122 32672	1 µF 16V
C8B1	4822 122 32672	1 µF 16V
C8B2	4822 122 33714	0.1 µF 25V
C8B3	4822 122 33714	0.1 µF 25V
C8B5	4822 122 33714	0.1 µF 25V
C8B6	4822 122 33714	0.1 µF 25V
C8B7	4822 122 33714	0.1 µF 25V
C8B8	4822 122 33714	0.1 µF 25V
C8B9	4822 122 33714	0.1 µF 25V
C8C0	4822 122 32672	1 µF 16V
C8C1	4822 124 22725	10 µF 16V
C8C2	4822 124 23127	0.47 µF 35V
C8C3	4822 122 33714	0.1 µF 25V
C8C5	4822 122 32672	1 µF 16V
C8C6	4822 122 32695	68 pF
C8C8	4822 122 32672	1 µF 16V
C8C9	4822 122 32672	1 µF 16V
C8D0	4822 122 32672	1 µF 16V
C8D1	4822 122 33714	0.1 µF 25V
C8D2	4822 122 33714	0.1 µF 25V
C8D3	4822 122 33714	0.1 µF 25V
C8D4	4822 122 33714	0.1 µF 25V
C8D5	4822 122 32672	1 µF 16V
C8D6	4822 122 32921	150 pF
C8D7	4822 122 32672	1 µF 16V

RF/IF, CHROMA DECODER, RF/IF/CHROMA/POWER SUPPLY (continued)

C8D8	4822 122 32921	150 pF
C8D9	4822 122 32672	1 µF 16V
C8E0	4822 122 32921	150 pF
C8E1	4822 122 33714	0.1 µF 25V
C8E2	4822 122 33714	0.1 µF 25V
C8E3	4822 124 22728	100 µF 16V
C8E4	4822 122 33689	0.01 µF
C8E5	4822 122 32693	33 pF
C8E6	4822 122 33714	0.1 µF
C8E7	4822 122 32694	47 pF
C8E8	4822 122 32672	1 µF 16V
C8E9	4822 122 33689	0.01 µF
C8F0	4822 122 33714	0.1 µF 25V
C8F1	4822 124 22728	100 µF 16V
C8F2	4822 124 22727	47 µF 16V
C8F3	4822 122 32693	33 pF
C8F4	4822 122 32703	330 pF
C8F5	4822 124 41839	10 µF 6.3V
C8F6	4822 122 32703	330 pF
C8F7	4822 122 32701	0.022 µF
C8F8	4822 122 32701	0.022 µF
C8F9	4822 122 32701	0.022 µF
C8G1	4822 122 33714	0.1 µF 25V
C8G2	4822 122 33714	0.1 µF 25V
C8G3	4822 122 33132	22 pF
C8G4	4822 122 33132	22 pF
C8G5	4822 122 32665	0.001 µF
C8G6	4822 122 33135	220 pF
C8G7	4822 122 32672	1 µF 16V
C8G8	4822 122 33714	0.1 µF
C8G9	4822 122 33135	220 pF
C8H0	4822 122 32672	1 µF 16V
C8H1	4822 122 32665	0.001 µF
C8H2	4822 122 33132	22 pF
C8H3	4822 122 33132	22 pF
C8H4	4822 122 33689	0.01 µF
C8H5	4822 122 33714	0.1 µF 25V
C8H8	4822 122 32665	0.001 µF
C8H9	4822 122 32665	0.001 µF
C8J0	4822 122 32665	0.001 µF
C8J1	4822 122 32701	0.022 µF
C8J2	4822 122 32701	0.022 µF
C8J3	4822 122 33689	0.01 µF
C8J4	4822 122 33689	0.01 µF
C8J5	4822 122 32665	0.001 µF
C8J6	4822 122 32694	47 pF
C8J7	4822 122 32697	2200 pF
C8J9	4822 124 41839	10 µF 6.3V
C8K1	4822 122 33714	0.1 µF 25V
C8K2	4822 122 32693	33 pF
C8K3	4822 122 32686	100 pF
C8K4	4822 122 33714	0.1 µF 25V
C8K5	4822 122 33712	470 pF
C8K6	4822 122 32669	47000 pF
C8K7	4822 122 32665	1000 pF

D1A0	4822 130 81166	1SS184
D1A1	4822 130 81166	1SS184
D1A2	4822 130 81167	MA701
D1A3	4822 130 81167	MA701
D1A4	4822 130 81166	1SS184
D701	4822 130 81168	1SS268
D702	4822 130 81168	1SS268
D703	4822 130 81089	1SS226
D704	4822 130 81711	1SV172
D705	4822 130 81711	1SV172
D706	4822 130 81711	1SV172
D707	4822 130 81711	1SV172
D708	4822 130 81711	1SV172
D709	4822 130 81711	1SV172
D710	4822 130 81711	1SV172
D711	4822 130 81711	1SV172
D712	4822 130 81166	1SS184
D772	4822 130 81166	1SS184
D8A2	4822 130 81089	1SS226
D8A3	4822 130 81089	1SS226
D8A4	4822 130 81166	1SS184
D8A5	4822 130 81166	1SS184
D8A6	4822 130 81166	1SS184

E701	4822 210 10395	U.V.H.F. Tuner

FL8A	4822 242 72589	L.C. Filter
FL8B	4822 320 40216	Delay Line

IC1A	4822 209 60119	FA7610N
IC71	4822 209 73907	UPC1416G
IC72	4822 209 73907	UPC1416G
IC73	4822 209 62501	TSA5511T
IC74	4822 209 62503	74HC4053
IC8A	4822 209 61643	M52003AFP
IC8B	4822 209 61644	M51404AFP
IC8C	4822 209 60334	TC4S81F
IC8D	4822 209 11502	TC4081BF
IC8E	4822 209 73911	4069UBF

J1A0	4822 267 31204	2 Pin Jack
J1A1	4822 265 30857	4 Pin Jack
J702	4822 265 30857	4 Pin Jack
J801	4822 267 31204	2 Pin Jack
J802	4822 267 31206	16 Pin Jack
J804	4822 265 30857	4 Pin Jack

L1A0	4822 157 53867	220 µH
L1A1	4822 157 60429	1000 µH
L1A2	4822 157 60431	470 µH
L1A3	4822 157 53865	100 µH
L1A4	4822 157 60431	470 µH
L1A5	4822 157 60429	1000 µH
L1A6	4822 157 62732	22 µH
L701	4822 156 21614	DET. Coil
L702	4822 156 21614	AFT. Coil
L703	4822 157 60427	I.F.T. Coil
L704	4822 157 62722	10 µH
L705	4822 157 62731	2.2 µH
L706	4822 157 62721	1 µH
L707	4822 157 62722	10 µH
L8A1	4822 157 62726	15 µH
L8A2	4822 157 60423	L.C. Filter
L8A3	4822 157 62728	150 µH
L8A4	4822 157 62319	L.C. Filter
L8A5	4822 157 62726	15 µH
L8A6	4822 157 60425	CHOKE Coil

RF/IF, CHROMA DECODER, RF/IF/CHROMA/POWER SUPPLY (continued)

L8A7	4822 157 60422	L.C. Filter
L8A8	4822 157 60422	L.C. Filter
L8A9	4822 157 60422	L.C. Filter
L8B0	4822 157 60421	L.C. Filter
L8B1	4822 157 62732	22 µH

Q1A0	4822 130 61425	2SC2873 (Y)
Q408	4822 130 42733	2SA1162
Q409	4822 130 43398	2SC2712
Q700	4822 130 61424	2SC2714
Q701	4822 130 43398	2SC2712 (GR)
Q702	4822 130 42733	2SA1162 (G)
Q703	4822 130 42733	2SA1162 (G)
Q704	4822 130 43398	2SC2712 (GR)
Q705	4822 130 43398	2SC2712 (GR)
Q706	4822 130 61424	2SC2714 (O)
Q707	4822 130 61885	RN1443
Q708	4822 130 61884	RN1404
Q709	4822 130 42733	2SA1162 (G)
Q710	4822 130 43398	2SC2712 (GR)
Q711	4822 130 61424	2SC2714 (O)
Q712	4822 130 43398	2SC2712 (GR)
Q713	4822 130 61884	RN1404
Q714	4822 130 61884	RN1404
Q715	4822 130 61884	RN1404
Q716	4822 130 42733	2SA1162 (G)
Q719	4822 130 43398	2SC2712 (GR)
Q720	4822 130 43398	2SC2712 (GR)
Q721	4822 130 43398	2SC2712 (GR)
Q8A3	4822 130 43398	2SC2712 (GR)
Q8A4	4822 130 43398	2SC2712 (GR)
Q8A5	4822 130 43398	2SC2712 (GR)
Q8A6	4822 130 43398	2SC2712 (GR)
Q8A7	4822 130 43398	2SC2712 (GR)
Q8A8	4822 130 61799	DTA144TK
Q8A9	4822 130 43398	2SC2712 (GR)
Q8B0	4822 130 43398	2SC2712 (GR)
Q8B1	4822 130 43398	2SC2712 (GR)
Q8B2	4822 130 43398	2SC2712 (GR)
Q8B3	4822 130 43398	2SC2712 (GR)
Q8B4	4822 130 43398	2SC2712 (GR)
Q8B5	4822 130 43398	2SC2712 (GR)
Q8B6	4822 130 43398	2SC2712 (GR)

R1A0	4822 051 30105	1MΩ 1/16W
R1A1	4822 051 30682	6.8 kΩ 1/16W
R1A2	4822 100 11604	Trimmer 1KΩ 1/10W
R1A3	4822 051 30473	47 kΩ 1/16W
R1A4	4822 116 82487	0 Ω 1/16W
R1A5	4822 051 30472	4.7 kΩ 1/16W
R1A6	4822 051 30471	470 Ω 1/16W
R1A7	4822 051 30101	100 Ω 1/16W
R1A8	4822 051 30224	220 kΩ 1/16W
R1A9	4822 051 30684	680 kΩ 1/16W
R1B0	4822 051 30333	33 kΩ 1/16W
R422	4822 051 30473	47 KΩ 1/16W
R423	4822 051 30223	22 KΩ 1/16W
R424	4822 051 30223	22 KΩ 1/16W
R701	4822 051 30222	2.2 kΩ 1/16W
R703	4822 051 30333	33 kΩ 1/16W
R704	4822 051 30104	100 kΩ 1/16W
R705	4822 051 30101	100Ω 1/16W
R706	4822 051 30472	4.7 kΩ 1/16W
R707	4822 051 30473	47 kΩ 1/16W
R708	4822 051 30473	47 kΩ 1/16W
R709	4822 051 30473	47 kΩ 1/16W
R710	4822 051 30223	22 kΩ 1/16W
R711	4822 051 30473	47 kΩ 1/16W
R712	4822 051 30473	47 kΩ 1/16W
R713	4822 051 30223	22 kΩ 1/16W
R714	4822 051 30104	100 kΩ 1/16W
R716	4822 051 30472	4.7 kΩ 1/16W
R717	4822 051 30682	6.8 kΩ 1/16W
R718	4822 051 30223	22 kΩ 1/16W
R719	4822 051 30333	33 kΩ 1/16W
R720	4822 051 30222	2.2 kΩ 1/16W
R721	4822 051 30153	15 kΩ 1/16W
R722	4822 051 30153	15 kΩ 1/16W
R723	4822 051 30223	22 kΩ 1/16W
R724	4822 051 30103	10 kΩ 1/16W
R725	4822 051 30103	10 kΩ 1/16W
R726	4822 051 30223	22 kΩ 1/16W
R727	4822 051 30102	1 kΩ 1/16W
R728	4822 051 30472	4.7 kΩ 1/16W
R729	4822 051 30103	10 kΩ 1/16W
R730	4822 051 30152	1.5 kΩ 1/16W
R731	4822 051 30681	680 Ω 1/16W
R732	4822 051 30229	22 Ω 1/16W
R733	4822 051 30681	680 Ω 1/16W
R734	4822 051 30101	100 Ω 1/16W
R735	4822 051 30472	4.7 kΩ 1/16W
R736	4822 051 30331	330 Ω 1/16W
R737	4822 100 11604	Trimmer 1KΩ 1/10W
R738	4822 051 30333	33 kΩ 1/16W
R739	4822 051 30224	220 kΩ 1/16W
R740	4822 051 30154	150 kΩ 1/16W
R741	4822 051 30101	100 Ω 1/16W
R742	4822 051 30109	10 Ω 1/16W
R743	4822 051 30471	470 Ω 1/16W
R744	4822 051 30154	150 kΩ 1/16W
R745	4822 051 30103	10 kΩ 1/16W
R746	4822 051 30154	150 kΩ 1/16W
R747	4822 051 30334	330 kΩ 1/16W
R748	4822 051 30334	330 kΩ 1/16W
R749	4822 051 30104	100 kΩ 1/16W
R750	4822 051 30102	1 kΩ 1/16W
R751	4822 051 30102	1 kΩ 1/16W
R752	4822 051 30104	100 kΩ 1/16W
R753	4822 051 30472	4.7 kΩ 1/16W
R754	4822 051 30102	1 kΩ 1/16W
R756	4822 051 30474	470 kΩ 1/16W
R757	4822 051 30334	330 kΩ 1/16W
R758	4822 051 30103	10 kΩ 1/16W
R759	4822 051 30472	4.7 kΩ 1/16W
R760	4822 051 30101	100 Ω 1/16W
R761	4822 051 30222	2.2 kΩ 1/16W
R762	4822 051 30471	470 Ω 1/16W
R763	4822 051 30681	680 Ω 1/16W
R764	4822 051 30472	4.7 kΩ 1/16W
R765	4822 051 30682	6.8 kΩ 1/16W
R766	4822 051 30103	10 kΩ 1/16W
R767	4822 051 30759	75 Ω 1/16W
R768	4822 116 82487	0 Ω 1/16W
R769	4822 051 30223	22 kΩ 1/16W
R770	4822 051 30684	680 kΩ 1/16W
R771	4822 051 30104	100 kΩ 1/16W

RF/IF, CHROMA DECODER, RF/IF/CHROMA/POWER SUPPLY (continued)

R772	4822 051 30103	10 kΩ 1/16W
R773	4822 051 30103	10 kΩ 1/16W
R774	4822 051 30103	10 kΩ 1/16W
R775	4822 051 30683	68 kΩ 1/16W
R776	4822 051 30473	47 kΩ 1/16W
R777	4822 051 30473	47 kΩ 1/16W
R778	4822 051 30154	150 kΩ 1/16W
R779	4822 051 30104	100 kΩ 1/16W
R780	4822 051 30101	100 Ω 1/16W
R781	4822 051 30109	10 Ω 1/16W
R782	4822 051 30103	10 kΩ 1/16W
R783	4822 051 30154	150 kΩ 1/16W
R784	4822 051 30103	10 kΩ 1/16W
R785	4822 051 30154	150 kΩ 1/16W
R786	4822 051 30471	470 Ω 1/16W
R787	4822 051 30103	10 kΩ 1/16W
R788	4822 051 30101	100 Ω 1/16W
R789	4822 051 30103	10 kΩ 1/16W
R790	4822 051 30103	10 kΩ 1/16W
R791	4822 051 30682	6.8 kΩ 1/16W
R792	4822 051 30479	47 Ω 1/16W
R793	4822 051 30221	220 Ω 1/16W
R794	4822 051 30151	150 Ω 1/16W
R795	4822 051 30472	4.7 kΩ 1/16W
R796	4822 051 30472	4.7 kΩ 1/16W
R797	4822 051 30472	4.7 kΩ 1/16W
R798	4822 051 30101	100 Ω 1/16W
R799	4822 051 30471	470 Ω 1/16W
R7A1	4822 051 30222	2.2 kΩ 1/16W
R7A2	4822 051 30222	2.2 kΩ 1/16W
R7A3	4822 051 30222	2.2 kΩ 1/16W
R7B1	4822 051 30223	22 kΩ 1/16W
R7B2	4822 116 82487	0 Ω 1/16W
R7B3	4822 051 30681	680 Ω 1/16W
R7B5	4822 051 30153	15 kΩ 1/16W
R8A1	4822 051 30102	1 kΩ 1/16W
R8A2	4822 051 30472	4.7 kΩ 1/16W
R8A3	4822 051 30153	15 kΩ 1/16W
R8A4	4822 051 30152	1.5 kΩ 1/16W
R8A5	4822 051 30103	10 kΩ 1/16W
R8A6	4822 051 30471	470 Ω 1/16W
R8A7	4822 051 30332	3.3 kΩ 1/16W
R8A8	4822 051 30103	10 kΩ 1/16W
R8A9	4822 051 30103	10 kΩ 1/16W
R8B0	4822 051 30473	47 kΩ 1/16W
R8B1	4822 051 30153	15 kΩ 1/16W
R8B2	4822 051 30103	10 kΩ 1/16W
R8B3	4822 051 30223	22 kΩ 1/16W
R8B4	4822 051 30153	15 kΩ 1/16W
R8B5	4822 051 30153	15 kΩ 1/16W
R8B6	4822 051 30222	2.2 kΩ 1/16W
R8B9	4822 051 30105	1 MΩ 1/16W
R8C0	4822 051 30332	3.3 kΩ 1/16W
R8C2	4822 051 30473	47 kΩ 1/16W
R8C3	4822 051 30153	15 kΩ 1/16W
R8C4	4822 100 11608	Trimmer 10 kΩ 1/10W
R8C5	4822 051 30333	33 kΩ 1/16W
R8C6	4822 051 30221	220 Ω 1/16W
R8C7	4822 051 30104	100 kΩ 1/16W
R8C8	4822 051 30473	47 kΩ 1/16W
R8D0	4822 051 30103	10 kΩ 1/16W
R8D1	4822 051 30104	100 kΩ 1/16W
R8D2	4822 051 30105	1 MΩ 1/16W
R8D3	4822 051 30221	220 Ω 1/16W
R8D4	4822 051 30105	1 MΩ 1/16W
R8D5	4822 051 30221	220 Ω 1/16W
R8D6	4822 051 30105	1 MΩ 1/16W
R8D7	4822 051 30221	220 Ω 1/16W
R8D8	4822 051 30331	330 Ω 1/16W
R8D9	4822 051 30224	220 kΩ 1/16W
R8E0	4822 051 30153	15 kΩ 1/16W
R8E1	4822 051 30333	33 kΩ 1/16W
R8E2	4822 051 30152	1.5 kΩ 1/16W
R8F1	4822 051 30223	22 kΩ 1/16W
R8F2	4822 051 30223	22 kΩ 1/16W
R8F3	4822 051 30102	1 kΩ 1/16W
R8F4	4822 051 30102	1 kΩ 1/16W
R8F5	4822 051 30102	1 kΩ 1/16W
R8F6	4822 051 30332	3.3 kΩ 1/16W
R8F7	4822 051 30681	680 Ω 1/16W
R8F8	4822 051 30471	470 Ω 1/16W
R8F9	4822 051 30333	33 kΩ 1/16W
R8G0	4822 051 30223	22 kΩ 1/16W
R8G1	4822 051 30102	1 kΩ 1/16W
R8G2	4822 051 30102	1 kΩ 1/16W
R8G3	4822 051 30102	1 kΩ 1/16W
R8G4	4822 051 30102	1 kΩ 1/16W
R8G5	4822 051 30333	33 kΩ 1/16W
R8G6	4822 051 30102	1 kΩ 1/16W
R8G7	4822 051 30331	330 Ω 1/16W
R8G8	4822 051 30102	1 kΩ 1/16W
R8G9	4822 100 11604	Trimmer 1KΩ 1/10W
R8H0	4822 051 30472	4.7 kΩ 1/16W
R8H1	4822 051 30152	1.5 kΩ 1/16W
R8H2	4822 051 30154	150 kΩ 1/16W
R8H3	4822 051 30473	47 kΩ 1/16W
R8H4	4822 051 30152	1.5 kΩ 1/16W
R8H5	4822 051 30331	330 Ω 1/16W
R8H6	4822 051 30102	1 kΩ 1/16W
R8H7	4822 051 30223	22 kΩ 1/16W
R8H8	4822 051 30223	22 kΩ 1/16W
R8H9	4822 051 30222	2.2 kΩ 1/16W
R8J0	4822 051 30333	33 kΩ 1/16W
R8J1	4822 051 30681	680 Ω 1/16W
R8J2	4822 051 30331	330 Ω 1/16W
R8J3	4822 051 30102	1 kΩ 1/16W
R8J4	4822 051 30223	22 kΩ 1/16W
R8J5	4822 051 30223	22 kΩ 1/16W
R8J6	4822 051 30222	2.2 kΩ 1/16W
R8J7	4822 051 30333	33 kΩ 1/16W
R8J8	4822 051 30681	680 Ω 1/16W
R8J9	4822 051 30152	1.5 kΩ 1/16W
R8K0	4822 051 30102	1 kΩ 1/16W
R8K1	4822 051 30682	6.8 kΩ 1/16W
R8K2	4822 051 30153	15 kΩ 1/16W
R8K3	4822 051 30332	3.3 kΩ 1/16W
R8K6	4822 051 30102	1 kΩ 1/16W
R8K7	4822 051 30102	1 kΩ 1/16W
R8K8	4822 051 30222	2.2 kΩ 1/16W
R8K9	4822 051 30102	1 kΩ 1/16W
R8L1	4822 051 30683	68 kΩ 1/16W
R8L2	4822 051 30682	6.8 kΩ 1/16W
R8L3	4822 051 30103	10 kΩ 1/16W
R8M1	4822 051 30104	100 kΩ 1/16W
R8M2	4822 051 30153	15 kΩ 1/16W
R8M3	4822 051 30223	22 kΩ 1/16W
R8M5	4822 051 30105	1 MΩ 1/16W
R8M6	4822 051 30223	22 kΩ 1/16W
R8M7	4822 051 30102	1 kΩ 1/16W

RF/IF, CHROMA DECODER, RF/IF/CHROMA/POWER SUPPLY (continued)

R8M9	4822 051 30105	1 MΩ 1/16W
R8N0	4822 051 30103	10 kΩ 1/16W
R8N1	4822 051 30222	2.2 kΩ 1/16W
R8N2	4822 051 30223	22 kΩ 1/16W
R8N3	4822 051 30103	10 kΩ 1/16W
R8N4	4822 051 30223	22 kΩ 1/16W
R8N5	4822 051 30103	10 kΩ 1/16W
R8N6	4822 051 30221	2.2 kΩ 1/16W
R8N7	4822 051 30105	1 MΩ 1/16W
R8N8	4822 051 30105	1 MΩ 1/16W
R8N9	4822 051 30105	1 MΩ 1/16W
T1A0	4822 146 30835	POWER TRANSF.

X701	4822 242 71833	4.0 MHz Crystal
X702	4822 242 72929	Saw Filter
X703	4822 242 72928	Saw Filter
X704	4822 242 72931	Saw Filter
X705	4822 242 73621	5.5 MHz Ceramic Filter
X706	4822 242 72906	6.0 MHz Ceramic Filter
X707	4822 242 73622	5.5 MHz Ceramic Filter
X708	4822 242 72187	6.0 MHz Ceramic Filter
X709	4822 242 72926	5.5 MHz Ceramic Filter
X8A1	4822 242 72593	4 MHz Crystal Resonator

BACK LIGHT/AMP/CONTROL

C1C0	4822 124 22728	100 µF 16V
C1C1	4822 121 20256	0.068 µF
C1C2	4822 121 20255	0.1 µF 250V
C1C3	4822 122 33714	0.1 µF 25V
C1C4	4822 124 41839	10 µF 6.3V
C1C5	4822 122 33714	0.1 µF 25V
C1C6	4822 126 10829	82 pF
C4A0	4822 124 41839	10 µF 6.3V
C4A1	4822 124 41839	10 µF 6.3V
C4A2	4822 122 32669	47000 pF
C4A3	4822 124 41839	10 µF 6.3V
C4A4	4822 124 23464	1 µF 50V
C4A5	4822 122 32669	47000 pF
C4A6	4822 124 22728	100 µF 16V
C4A7	4822 122 33239	0.1 µF 25V
C4A8	4822 124 22728	100 µF 16V
C4A9	4822 126 11519	0.033 µF
C4B0	4822 124 22727	47 µF 16V
C4B1	4822 124 22727	47 µF 16V
C4B2	4822 124 22728	100 µF 16V
C4C0	4822 124 22728	100 µF 16V
C4C1	4822 124 22728	100 µF 16V
D1C0	4822 130 81089	1SS226
IC4A	4822 209 63129	NJM386BM
J1A1	4822 267 31203	2 Pin Jack
J1A2	4822 267 31205	2 Pin Jack
J4A0	4822 265 30857	4 Pin Jack
J4A1	4822 265 41074	8 Pin Jack
J4A2	4822 265 30859	4 Pin Jack
J4A3	4822 265 30857	4 Pin Jack
J4A5	4822 265 40763	16 Pin Jack
J4A6	4822 265 30859	4 Pin Jack
J4A7	4822 265 40763	16 Pin Jack
J4A8	4822 265 41076	10 Pin Jack
J4A9	4822 267 50867	10 Pin Jack
J4B0	4822 267 31204	2 Pin Jack
J4B1	4822 267 31204	2 Pin Jack
J4B2	4822 267 31204	2 Pin Jack

L1C1	4822 157 53867	220 µH
Q1C0	4822 130 43398	2SC2712 (GR)
Q1C1	4822 130 42733	2SA1162 (G)
Q1C2	4822 130 42733	2SA1162 (G)
Q1C3	4822 130 42733	2SA1162 (G)
Q1C4	4822 130 43398	2SC2712 (GR)
Q1C5	4822 130 61354	2SA1213 (Y)
Q1C6	4822 130 43398	2SC2712 (GR)
Q1C7	4822 130 61425	2SC2873 (Y)
Q1C8	4822 130 61425	2SC2873 (Y)
Q1C9	4822 130 61425	2SC2873 (Y)
Q1D0	4822 130 61425	2SC2873 (Y)
Q1D1	4822 130 61884	RN1404
Q1D2	4822 130 61884	RN1404
Q4A0	4822 130 43398	2SC2712 (GR)
Q4A1	4822 130 42733	2SA1162 (G)
R1C0	4822 051 30682	6.8 kΩ 1/16W
R1C1	4822 051 30333	33 kΩ 1/16W
R1C2	4822 051 30222	2.2 kΩ 1/16W
R1C3	4822 051 30682	6.8 kΩ 1/16W
R1C4	4822 051 30103	10 kΩ 1/16W
R1C5	4822 051 30103	10 kΩ 1/16W
R1C6	4822 051 30102	1 kΩ 1/16W
R1C7	4822 051 30472	4.7 kΩ 1/16W
R1C8	4822 051 30102	1 kΩ 1/16W
R1C9	4822 051 30332	3.3 kΩ 1/16W
R1D0	4822 051 30152	1.5 kΩ 1/16W
R1D1	4822 051 30332	3.3 kΩ 1/16W
R1D2	4822 051 30102	1 kΩ 1/16W
R1D3	4822 051 30152	1.5 kΩ 1/16W
R1D4	4822 051 30333	33 kΩ 1/16W
R1D5	4822 051 30333	33 kΩ 1/16W
R1D6	4822 111 90901	150 kΩ 1/10W
R1D7	4822 111 90901	150 kΩ 1/10W
R1D8	4822 111 90901	150 kΩ 1/10W
R1D9	4822 111 90901	150 kΩ 1/10W
R1E0	4822 111 90901	150 kΩ 1/10W
R1E1	4822 051 30103	10 kΩ 1/16W
R4A0	4822 101 30717	Variable 50 kΩ

BACK LIGHT/AMP/CONTROL (continued)

R4A1	4822 101 30717	Variable 50 kΩ
R4A2	4822 051 30472	4.7 kΩ 1/16W
R4A3	4822 051 30332	3.3 kΩ 1/16W
R4A4	4822 051 30683	68 kΩ 1/16W
R4A5	4822 051 30471	470Ω 1/16W
R4A6	4822 101 30716	Variable 50 kΩ
R4A7	4822 051 30102	1 kΩ 1/16W
R4A8	4822 116 82487	0 Ω 1/16W
R4A9	4822 051 30473	47 kΩ 1/16W
R4B0	4822 051 30473	47 kΩ 1/16W
R4B2	4822 051 30102	1 kΩ 1/16W
R4B3	4822 051 30681	680 Ω 1/16W
R4B4	4822 051 30471	470 Ω 1/16W
R4B5	4822 051 30681	680 Ω 1/16W
R4B6	4822 051 30222	2.2 kΩ 1/16W
R4B8	4822 051 30104	100 kΩ 1/16W
R4B9	4822 111 91019	150 Ω 1/8W
R4C0	4822 111 91019	150 Ω 1/8W

R4C1	4822 051 30759	75 Ω 1/16W
R4C2	4822 051 30154	150 kΩ 1/16W
R4C3	4822 051 30472	4.7 kΩ 1/16W
R4C5	4822 051 30101	100 Ω 1/16W
R4C6	4822 116 82487	0 Ω 1/16W
S401	4822 276 12994	PUSH SWITCH
S4A0	4822 276 12455	TACT SWITCH
S4A1	4822 276 12455	TACT SWITCH
T1C0 ⚠	4822 146 21575	POWER TRANSF.
T1C1 ⚠	4822 146 21574	POWER TRANSF.
Z1C0	4822 130 81169	5.6V ZENER DIODE
Z1C1	4822 130 81169	5.6V ZENER DIODE

CHROMINANCE/LUMINANCE

C301	4822 122 33689	0.01 µF
C302	4822 122 33689	0.01 µF
C303	4822 124 22725	10 µF 16V
C304	4822 124 22725	10 µF 16V
C305	4822 122 33689	0.01 µF
C307	4822 122 33689	0.01 µF
C308	4822 122 33689	0.01 µF
C309	4822 122 32686	100 pF
C310	4822 122 32686	100 pF
C311	4822 124 22725	10 µF 16V
C312	4822 122 33689	0.01 µF
C313	4822 124 23758	220 µF 6V
C314	4822 122 32669	47000 pF
C315	4822 122 32686	100 pF
C316	4822 124 22726	4.7 µF 35V
C317	4822 124 22725	10 µF 16V
C318	4822 124 22726	4.7 µF 35V
C319	4822 124 22727	47 µF 16V
C320	4822 122 33689	0.01 µF
C321	4822 122 33714	0.1 µF 25V
C322	4822 122 32701	0.022 µF
C323	4822 122 32695	68 pF
C324	4822 122 32695	68 pF
C325	4822 124 22725	10 µF 16V
C326	4822 122 32695	68 pF
C327	4822 122 33138	680 pF
C328	4822 122 32686	100 pF
C329	4822 122 32695	68 pF
C330	4822 122 32695	68 pF
C331	4822 124 22725	10 µF 16V
C332	4822 122 33689	0.01 µF
C333	4822 122 32672	1 µF 16V
C334	4822 122 33714	0.1 µF 25V
C336	4822 124 22725	10 µF 16V
C337	4822 122 33689	0.01 µF
C338	4822 122 33689	0.01 µF
C339	4822 124 22725	10 µF 16V
C340	4822 124 22725	10 µF 16V
C341	4822 122 33709	3 pF
C342	4822 122 33714	0.1 µF 25V
C801	4822 122 33714	0.1 µF 25V

C802	4822 122 33689	0.01 µF
C803	4822 124 23464	1 µF 50V
C804	4822 122 32703	330 pF
C805	4822 122 32672	1 µF 16V
C806	4822 124 23464	1 µF 50V
C807	4822 122 32701	0.022 µF
C808	4822 122 32669	47000 pF
C809	4822 122 33689	0.01 µF
C810	4822 124 22725	10 µF 16V
C811	4822 122 32686	100 pF
C812	4822 122 32703	330 pF
C814	4822 122 33689	0.01 µF
C816	4822 122 33689	0.01 µF
C817	4822 124 23464	1 µF 50V
C818	4822 122 32669	47000 pF
C819	4822 122 32693	33 pF
C820	4822 122 32695	68 pF
C821	4822 122 33689	0.01 µF
C822		220 µF 6V
C823	4822 122 33689	0.01 µF
C824	4822 122 32686	100 pF
C825	4822 122 33689	0.01 µF
C826	4822 122 33689	0.01 µF
C827	4822 122 33689	0.01 µF
C828	4822 122 33689	0.01 µF
C829	4822 122 33689	0.01 µF
C831	4822 122 32665	0.001 µF
C832	4822 122 32665	1000 pF
C833	4822 124 23759	2.2 µF 6.3V
C834	4822 124 23759	2.2 µF 6.3V
C835	4822 124 41839	10 µF 6.3V
C836	4822 124 41839	10 µF 6.3V
C837	4822 122 33689	0.01 µF
C838	4822 124 41839	10 µF 6.3V
C839	4822 126 10006	7 pF
C840	4822 122 33689	0.01 µF
C841	4822 122 32695	68P
C842	4822 122 33689	0.01 µF
C843	4822 124 22728	100 µF 16V

CHROMINANCE/LUMINANCE (continued)

D303	4822 130 81166	1SS184
D304	4822 130 81166	1SS184
D801	4822 130 81166	1SS184
D802	4822 130 81166	1SS184
D803	4822 130 81166	1SS184
D804	4822 130 81166	1SS184
FL31	4822 242 72948	L.C. Filter 3MHZ
FL81	4822 320 40219	DELAY LINE
FL82	4822 242 72949	L.C. Filter
IC31	4822 209 63153	BA7259AK
IC32	4822 209 61727	LC8992 1HCCD PAL
IC81	4822 209 63156	LA7330M
IC82	4822 209 63155	LA7311 SECAM DETECTOR
J301	4822 265 30858	3 Pin Jack
J302	4822 267 31204	2 Pin Jack
J303	4822 267 50868	8 Pin Jack
J304	4822 265 41073	7 Pin Jack
L301	4822 157 62732	22 µH
L302	4822 157 62732	22 µH
L303	4822 157 62746	68 µH
L304	4822 157 62723	100 µH
L305	4822 157 62723	100 µH
L306	4822 157 62744	4.7 µH
L801	4822 157 62732	22 µH
L802	4822 157 62742	3.3 µH
L803	4822 157 62726	15 µH
L804	4822 157 62741	220 µH
L806	4822 157 62743	330 µH
L808	4822 157 62732	22 µH
L809	4822 157 62723	100 µH
Q302	4822 130 43398	2SC2712 (GR)
Q303	4822 130 42733	2SA1162 (G)
Q304	4822 130 43398	2SC2712 (GR)
Q305	4822 130 60564	2SB956 (R)
Q306	4822 130 60564	2SB956 (R)
Q801	4822 130 43398	2SC2712 (GR)
Q802	4822 130 43398	2SC2712 (GR)
Q803	4822 130 61424	2SC2714 (O)
Q804	4822 130 43398	2SC2712 (GR)
Q806	4822 130 43398	2SC2712 (GR)
Q807	4822 130 42733	2SA1162 (G)
R301	4822 051 30223	22 kΩ 1/16W
R303	4822 051 30223	22 kΩ 1/16W
R307	4822 116 82487	0 Ω 1/16W
R309	4822 051 30334	330 kΩ 1/16W
R310	4822 100 11608	Trimmer 10 kΩ 1/10W
R311	4822 051 30103	10 kΩ 1/16W
R312	4822 100 11636	Trimmer 4.7 kΩ 1/10W
R313	4822 051 30472	4.7 kΩ 1/16W
R314	4822 051 30103	10 kΩ 1/16W
R315	4822 051 30222	2.2 kΩ 1/16W
R316	4822 051 30102	1 kΩ 1/16W
R318	4822 051 30102	1 kΩ 1/16W
R319	4822 051 30103	10 kΩ 1/16W
R320	4822 051 30224	220 kΩ 1/16W
R321	4822 100 11609	Trimmer 47 kΩ 1/10W
R322	4822 051 30102	1 kΩ 1/16W
R323	4822 051 30102	1 kΩ 1/16W
R324	4822 051 30102	1 kΩ 1/16W
R325	4822 051 30102	1 kΩ 1/16W
R326	4822 051 30682	6.8 kΩ 1/16W
R327	4822 051 30151	150 Ω 1/16W
R328	4822 051 30681	680 Ω 1/16W
R329	4822 051 30333	33 kΩ 1/16W
R330	4822 051 30471	470 Ω 1/16W
R331	4822 051 30152	1.5 kΩ 1/16W
R333	4822 051 30223	22 kΩ 1/16W
R334	4822 051 30103	10 kΩ 1/16W
R335	4822 051 30103	10 kΩ 1/16W
R336	4822 051 30223	22 kΩ 1/16W
R337	4822 100 11635	Trimmer 2.2 kΩ
R338	4822 051 30222	2.2 kΩ 1/16W
R339	4822 051 30332	3.3 kΩ 1/16W
R340	4822 051 30472	4.7 kΩ 1/16W
R341	4822 051 30472	4.7 kΩ 1/16W
R342	4822 116 82487	0 Ω 1/16W
R343	4822 051 30222	2.2 kΩ 1/16W
R802	4822 051 30223	22 kΩ 1/16W
R803	4822 051 30152	1.5 kΩ 1/16W
R805	4822 051 30102	1 kΩ 1/16W
R806	4822 051 30102	1 kΩ 1/16W
R807	4822 051 30102	1 kΩ 1/16W
R808	4822 051 30222	2.2 kΩ 1/16W
R811	4822 051 30472	4.7 kΩ 1/16W
R812	4822 051 30152	1.5 kΩ 1/16W
R813	4822 051 30479	47 Ω 1/16W
R814	4822 051 30479	47 Ω 1/16W
R815	4822 051 30102	1 kΩ 1/16W
R816	4822 051 30221	220 Ω 1/16W
R818	4822 051 30103	10 kΩ 1/16W
R820	4822 051 30103	10 kΩ 1/16W
R822	4822 116 82487	0 Ω 1/16W
R823	4822 051 30152	1.5 kΩ 1/16W
R824	4822 051 30104	100 kΩ 1/16W
R826	4822 051 30102	1 kΩ 1/16W
R827	4822 051 30472	4.7 kΩ 1/16W
R828	4822 051 30102	1 kΩ 1/16W
R829	4822 051 30152	1.5 kΩ 1/16W
R830	4822 051 30331	330 Ω 1/16W
R831	4822 051 30151	150 Ω 1/16W
R832	4822 051 30681	680 Ω 1/16W
R833	4822 051 30331	330 Ω 1/16W
R834	4822 051 30472	4.7 kΩ 1/16W
R835	4822 051 30472	4.7 kΩ 1/16W
R836	4822 051 30223	22 kΩ 1/16W
R837	4822 051 30223	22 kΩ 1/16W
R838	4822 051 30102	1 kΩ 1/16W
R839	4822 051 30102	1 kΩ 1/16W
R842	4822 051 30103	10 kΩ 1/16W
R844	4822 051 30103	10 kΩ 1/16W
R845	4822 051 30102	1 kΩ 1/16W
R846	4822 051 30152	1.5 kΩ 1/16W
R847	4822 051 30102	1 kΩ 1/16W
R848	4822 051 30479	47 Ω 1/16W
R849	4822 116 82487	0 Ω 1/16W
R850	4822 116 82487	0 Ω 1/16W

CHROMINANCE/LUMINANCE (continued)

R851	4822 116 82487	0 Ω 1/16W
R852	4822 051 30103	10 kΩ 1/16W
R853	4822 051 30472	4.7 kΩ 1/16W
R854	4822 051 30105	1M Ω 1/16W
R855	4822 051 30105	1M Ω 1/16W
R856	4822 051 30103	10 kΩ 1/16W
R857	4822 051 30222	2.2 kΩ 1/16W
X801	4822 242 72951	4.43 MHz Crystal

NORMAL AUDIO

C401	4822 124 22726	4.7 µF 35V
C402	4822 124 22726	4.7 µF 35V
C403	4822 122 32665	0.001 µF
C404	4822 122 32672	1 µF 16V
C405	4822 124 22727	47 µF 16V
C406	4822 124 23493	22 µF 16V BP
C407	4822 124 22727	47 µF 16V
C408	4822 124 22726	4.7 µF 35V
C409	4822 122 33713	6800 pF
C410	4822 124 22725	10 µF 16V
C411	4822 124 22726	4.7 µF 35V
C413	4822 121 41857	0.01 µF 50V
C414	4822 122 32672	1 µF 16V
C416	4822 122 32665	0.001 µF
C417	4822 124 22727	47 µF 16V
C418	4822 124 22727	47 µF 16V
C419	4822 121 41857	0.01 µF 50V
C420	4822 121 41667	6800 pF 100V
C421	4822 122 32701	0.022 µF
C422	4822 122 32665	0.001 µF
C423	4822 122 32701	0.022 µF
C424	4822 124 22728	100 µF 16V
C427	4822 122 32665	0.001 µF
C428	4822 122 33138	680 pF
C429	4822 124 22725	10 µF 16V
C430	4822 122 33714	0.1 µF
D401	4822 130 81166	1SS184
IC41	4822 209 63131	BA7751AF
IC42	4822 209 63132	BA7755A
J401	4822 267 31204	2 Pin Jack
J402	4822 265 30863	6 Pin Jack
J403	4822 267 31204	2 Pin Jack
J405	4822 265 41073	7 Pin Jack
J406	4822 265 20507	2 Pin Jack
L401	4822 157 62729	15 mH
L402	4822 157 62729	15 mH
L403	4822 156 21615	OSC COIL
L404	4822 157 62732	22 µH
L405	4822 157 62732	22 µH
Q401	4822 130 60564	2SB956 (R)
Q402	4822 130 43398	2SC2712 (GR)
Q403	4822 130 43398	2SC2712 (GR)
Q404	4822 130 42733	2SA1162 (G)
R401	4822 051 30332	3.3 kΩ 1/16W
R402	4822 051 30102	1 kΩ 1/16W
R403	4822 051 30223	22 kΩ 1/16W
R404	4822 051 30223	22 kΩ 1/16W
R405	4822 051 30103	10 kΩ 1/16W
R406	4822 051 30103	10 kΩ 1/16W
R407	4822 051 30153	15 kΩ 1/16W
R408	4822 051 30332	3.3 kΩ 1/16W
R409	4822 051 30682	6.8 kΩ 1/16W
R410	4822 051 30683	68 kΩ 1/16W
R411	4822 051 30103	10 kΩ 1/16W
R413	4822 051 30105	1 MΩ 1/16W
R416	4822 051 30471	470 Ω 1/16W
R418	4822 051 30103	10 kΩ 1/16W
R419	4822 051 30153	15 kΩ 1/16W
R420	4822 051 30222	2.2 kΩ 1/16W
R421	4822 051 30102	1 kΩ 1/16W
R422	4822 051 30479	47 Ω 1/16W
R423	4822 051 30331	330 Ω 1/16W
R424	4822 051 30334	330 kΩ 1/16W
R425	4822 051 30153	15 kΩ 1/16W
R427	4822 051 30109	10 Ω 1/16W
R428	4822 100 11609	Trimmer 47 kΩ 1/10W
R429	4822 051 30103	10 kΩ 1/16W
R432	4822 051 30333	33 kΩ 1/16W
R433	4822 051 30332	3.3 kΩ 1/16W
R434	4822 051 30332	3.3 kΩ 1/16W
R437	4822 051 30683	68 kΩ 1/16W
R440	4822 116 82487	0 Ω 1/16W
R443	4822 051 30223	22 kΩ 1/16W

AUDIO/VIDEO SELECTOR

C451	4822 124 22727	47 µF 16V
C452	4822 124 22725	10 µF 16V
C453	4822 124 22725	10 µF 16V
C454	4822 124 41839	10 µF 6.3V
C455	4822 124 41839	10 µF 6.3V
C456	4822 124 22725	10 µF 16V
C457	4822 124 41839	10 µF 6.3V
C458	4822 124 41839	10 µF 6.3V
C460	4822 122 32669	47000 pF
C461	4822 124 41839	10 µF 6.3V
C462	4822 124 41839	10 µF 6.3V
C463	4822 122 32686	100 pF
C464	4822 124 22725	10 µF 16V
C466	4822 122 32697	2200 pF
C467	4822 124 41839	10 µF 6.3V
C468	4822 122 32686	100 pF
C469	4822 122 32669	47000 pF
C470		470 µF 4V
C471	4822 122 32686	100 pF
C472		470 µF 4V
C473	4822 122 32686	100 pF
C474	4822 124 22725	10 µF 16V
C476	4822 122 32697	2200 pF
C480	4822 124 41839	10 µF 6.3V
C481	4822 122 33689	0.01 µF
C482	4822 124 41839	10 µF 6.3V
C484	4822 124 41839	10 µF 6.3V
C486	4822 124 41839	10 µF 6.3V
C487	4822 122 32686	100 pF
C488	4822 124 22727	47 µF 16V

D451	4822 130 81167	MA701

IC43	4822 209 60079	LA7222 ANALOG SW
IC44	4822 209 60079	LA7222 ANALOG SW

J451	4822 290 81385	Terminal (RED)
J452	4822 290 81385	Terminal (RED)
J453	4822 290 81386	Terminal (YELLOW)
J454	4822 290 81386	Terminal (YELLOW)
J455	4822 267 31204	2 Pin Jack
J456	4822 265 30857	4 Pin Jack
J458	4822 265 30859	4 Pin Jack
J459	4822 265 30859	4 Pin Jack
J463	4822 265 41071	14 Pin Jack
J467	4822 265 41073	7 Pin Jack
J468	4822 265 30862	6 Pin Jack
J469	4822 267 31204	2 Pin Jack
J470	4822 265 20361	2 Pin Plug
J471	4822 265 30657	3 Pin Jack
J472	4822 265 20361	2 Pin Plug
J473	4822 265 30569	3 Pin Plug
J478	4822 265 41073	7 Pin Jack

L452	4822 157 62723	100 µH
L453	4822 157 62724	1 mH
L454	4822 157 62724	1 mH
L455	4822 157 62723	100 µH

Q452	4822 130 43398	2SC2712 (GR)
Q453	4822 130 42733	2SA1162 (G)
Q454	4822 130 42733	2SA1162 (G)
Q455	4822 130 43398	2SC2712 (GR)
Q456	4822 130 43398	2SC2712 (GR)
Q460	4822 130 43398	2SC2712 (GR)
Q463	4822 130 42733	2SA1162 (G)
Q464	4822 130 43398	2SC2712 (GR)
Q465	4822 130 43398	2SC2712 (GR)

R451	4822 051 30153	15 kΩ 1/16W
R452	4822 051 30103	10 kΩ 1/16W
R453	4822 051 30103	10 kΩ 1/16W
R454	4822 051 30101	100 Ω 1/16W
R455	4822 051 30153	15 kΩ 1/16W
R456	4822 051 30103	10 kΩ 1/16W
R457	4822 051 30103	10 kΩ 1/16W
R458	4822 051 30101	100 Ω 1/16W
R459	4822 051 30221	220 Ω 1/16W
R461	4822 051 30103	10 kΩ 1/16W
R462	4822 051 30102	1 kΩ 1/16W
R463	4822 051 30104	100 kΩ 1/16W
R464	4822 051 30104	100 kΩ 1/16W
R465	4822 051 30154	150 kΩ 1/16W
R467	4822 051 30221	220 Ω 1/16W
R468	4822 051 30223	22 kΩ 1/16W
R470	4822 051 30759	75 Ω 1/16W
R472	4822 051 30221	220 Ω 1/16W
R473	4822 051 30759	75 Ω 1/16W
R474	4822 051 30221	220 Ω 1/16W
R475	4822 051 30229	22 Ω 1/16W
R476	4822 051 30229	22 Ω 1/16W
R477	4822 051 30759	75 Ω 1/16W
R478	4822 051 30221	220 Ω 1/16W
R479	4822 051 30223	22 kΩ 1/16W
R482	4822 051 30222	2.2 kΩ 1/16W
R483	4822 051 30222	2.2 kΩ 1/16W
R484	4822 051 30222	2.2 kΩ 1/16W
R485	4822 051 30223	22 kΩ 1/16W
R486	4822 051 30682	6.8 kΩ 1/16W
R487	4822 051 30472	4.7 kΩ 1/16W
R488	4822 051 30102	1 kΩ 1/16W
R489	4822 051 30102	1 kΩ 1/16W
R494	4822 051 30104	100 kΩ 1/16W
R495	4822 051 30104	100 kΩ 1/16W
R497	4822 051 30102	1 kΩ 1/16W
R498	4822 051 30152	1.5 kΩ 1/16W
R499	4822 051 30104	100 kΩ 1/16W
R4C0	4822 051 30102	1 kΩ 1/16W
R4K0	4822 051 30339	33 Ω 1/16W
R4P0	4822 051 30472	4.7 kΩ 1/16W
R4P1	4822 051 30472	4.7 kΩ 1/16W
R4P2	4822 051 30759	75 Ω 1/16W
R4P3	4822 051 30154	150 kΩ 1/16W
R4P4	4822 116 82487	0 Ω 1/16W
R4P5	4822 051 30102	1 kΩ 1/16W
R4P6	4822 051 30102	1 kΩ 1/16W
R4P7	4822 051 30102	1 kΩ 1/16W
R4P8	4822 051 30102	1 kΩ 1/16W
R4P9	4822 051 30101	100 Ω 1/16W
R4Q0	4822 051 30101	100 Ω 1/16W
R4Q1	4822 116 82487	0 Ω 1/16W
R4Q5	4822 051 30472	4.7 kΩ 1/16W

AUDIO/VIDEO SELECTOR (continued)

R4Q7	4822 051 30152	1.5 kΩ 1/16W
R4Q8	4822 051 30683	68 kΩ 1/16W
R4Q9	4822 051 30153	15 kΩ 1/16W
R4R0	4822 051 30222	2.2 kΩ 1/16W
R4R1	4822 051 30103	10 kΩ 1/16W
R4R7	4822 051 30472	4.7 kΩ 1/16W

S451	4822 277 21403	Slide Switch
S452	4822 277 21403	Slide Switch

Z451	4822 130 81169	5.6V Zener Diode
Z452	4822 130 81169	5.6V Zener Diode
Z453	4822 130 81169	5.6V Zener Diode
Z454	4822 130 81169	5.6V Zener Diode
Z455	4822 130 81169	5.6V Zener Diode
Z456	4822 130 81169	5.6V Zener Diode
Z457	4822 130 81169	5.6V Zener Diode
Z458	4822 130 81169	5.6V Zener Diode
Z459	4822 130 81169	5.6V Zener Doide
Z460	4822 130 81169	5.6V Zener Diode
Z461	4822 130 81169	5.6V Zener Diode
Z462	4822 130 81169	5.6V Zener Diode
Z468	4822 130 81169	5.6V Zener Diode
Z469	4822 130 81169	5.6V Zener Diode
Z470	4822 130 81169	5.6V Zener Diode
Z471	4822 130 81169	5.6V Zener Diode
Z472	4822 130 81169	5.6V Zener Diode
Z473	4822 130 81169	5.6V Zener Diode

HEAD AMP

C3H1	4822 122 32672	1 µF 16V
C3H2	4822 122 33689	0.01 µF
C3H3	4822 122 33689	0.01 µF
C3H4	4822 122 32672	1 µF 16V
C3H5	4822 122 32672	1 µF 16V
C3H6	4822 122 33689	0.01 µF
C3H7	4822 122 33689	0.01 µF
C3H8	4822 122 32672	1 µF 16V
C3H9	4822 122 32686	100 pF
C3J0	4822 122 32686	100 pF
C3J1	4822 122 32686	100 pF
C3J2	4822 122 32686	100 pF
C3J4	4822 122 33714	0.1 µF 25V
C3J5	4822 124 22728	100 µF 16V
C3J6	4822 126 10006	7 pF
C3J7	4822 122 32694	47 pF
C3J8	4822 122 32672	1 µF 16V
C3J9	4822 122 32686	100 pF
C3K0	4822 122 33138	680 pF
C3K1	4822 122 33132	22 pF
C3K2	4822 122 33132	22 pF
C3K3	4822 122 32693	33 pF
C3K4	4822 126 10006	7 pF
C3K5	4822 122 33714	0.1 µF 25V
C3K6	4822 122 32669	47000 pF
C3K7	4822 122 32669	47000 pF
C3K8	4822 122 32669	47000 pF
C3K9	4822 122 32669	47000 pF
C3L0	4822 122 32672	1 µF 16V
C3L1	4822 122 32672	1 µF 16V
C3L2	4822 122 32669	47000 pF
C3L3	4822 122 32669	47000 pF
C3L4	4822 122 32669	47000 pF
C3L5	4822 122 32669	47000 pF
C3L7	4822 122 32672	1 µF 16V
C3L8	4822 122 32672	1 µF 16V
C3L9	4822 122 33714	0.1 µF 25V
C3M0	4822 124 22728	100 µF 16V
C3M1	4822 122 33714	0.1 µF
C3M2	4822 122 33714	0.1 µF
C3M3	4822 122 33689	0.01 µF
C3M8	4822 122 33689	0.01 µF
C3M9	4822 122 33689	0.01 µF
C3N0	4822 122 33689	0.01 µF
C3N1	4822 122 33135	220 pF
C3N2	4822 122 32695	68 pF
C3N3	4822 122 33132	22 pF
C3N4	4822 122 33714	0.1 µF
C3N5	4822 122 32686	100 pF
C3N6	4822 122 32686	100 pF
C3N7	4822 124 22728	100 µF 16V
C3N8	4822 122 33689	0.01 µF
C3N9	4822 122 33689	0.01 µF
C3P0	4822 122 33689	0.01 µF
C3P1	4822 122 33689	0.01 µF
C3P2	4822 122 33689	0.01 µF
C3P3	4822 122 33689	0.01 µF
C3P4	4822 122 32686	100 pF
C3P5	4822 122 32921	150 pF
C3P6	4822 122 32693	33 pF
C3Q1	4822 122 33714	0.1 µF
C3Q2	4822 122 33714	0.1 µF

IC33	4822 209 72821	AN3311S

J3H1	4822 265 41072	7 Pin Jack
J3H2	4822 265 41076	10 Pin Jack

L3H2	4822 157 62734	33 µH
L3H3	4822 157 62722	10 µH
L3H4	4822 157 62723	100 µH
L3H5	4822 157 62722	10 µH
L3H6	4822 157 62723	100 µH
L3J2	4822 157 62722	10 µH
L3J3	4822 157 62725	12 µH
L3J4	4822 157 62734	33 µH
L3J5	4822 157 62734	33 µH
L3J6	4822 157 62736	47 µH
L3J7	4822 157 62728	150 µH

HEAD AMP (continued)

L3J8	4822 157 62723	100 µH
L3J9	4822 157 62723	100 µH

Q3H1	4822 130 61424	2SC2714 (O)
Q3H2	4822 130 43398	2SC2712 (GR)
Q3H3	4822 130 43398	2SC2712 (GR)
Q3H4	4822 130 43398	2SC2712 (GR)
Q3H5	4822 130 42733	2SA1162 (G)
Q3H6	4822 130 42733	2SA1162 (G)
Q3H7	4822 130 43398	2SC2712 (GR)
Q3H8	4822 130 43398	2SC2712 (GR)
Q3H9	4822 130 42733	2SA1162 (G)
Q3J0	4822 130 42733	2SA1162 (G)
Q3J1	4822 130 43398	2SC2712 (GR)
Q3J2	4822 130 43398	2SC2712 (GR)
Q3J3	4822 130 43398	2SC2712 (GR)
Q3J4	4822 130 42733	2SA1162 (G)
Q3J5	4822 130 42733	2SA1162 (G)
Q3J6	4822 130 43398	2SC2712 (GR)
Q3J7	4822 130 43398	2SC2712 (GR)
Q3J8	4822 130 42733	2SA1162 (G)
Q3J9	4822 130 42733	2SA1162 (G)
Q3K0	4822 130 43398	2SC2712 (GR)
Q3K1	4822 130 43398	2SC2712 (GR)
Q3K2	4822 130 43398	2SC2712 (GR)
Q3K3	4822 130 42733	2SA1162 (G)
Q3K4	4822 130 61424	2SC2714 (O)
Q3K5	4822 130 43398	2SC2712 (GR)
Q3K6	4822 130 42733	2SA1162 (G)
Q3K7	4822 130 42733	2SA1162 (G)
Q3K8	4822 130 60564	2SB956 (R)

R3H1	4822 051 30103	10 kΩ 1/16W
R3H2	4822 051 30152	1.5 kΩ 1/16W
R3H3	4822 051 30152	1.5 kΩ 1/16W
R3H4	4822 051 30152	1.5 kΩ 1/16W
R3H5	4822 051 30152	1.5 kΩ 1/16W
R3H6	4822 051 30103	10 kΩ 1/16W
R3H7	4822 051 30102	1 kΩ 1/16W
R3H8	4822 051 30681	680 Ω 1/16W
R3H9	4822 051 30102	1 kΩ 1/16W
R3J0	4822 051 30102	1 kΩ 1/16W
R3J1	4822 051 30221	220 Ω 1/16W
R3J2	4822 051 30102	1 kΩ 1/16W
R3J3	4822 051 30103	10 kΩ 1/16W
R3J4	4822 051 30473	47 kΩ 1/16W
R3J5	4822 051 30473	47 kΩ 1/16W
R3J6	4822 051 30473	47 kΩ 1/16W
R3J7	4822 051 30473	47 kΩ 1/16W
R3J8	4822 051 30103	10 kΩ 1/16W
R3J9	4822 051 30223	22 kΩ 1/16W
R3K0	4822 051 30223	22 kΩ 1/16W
R3K1	4822 051 30223	22 kΩ 1/16W
R3K2	4822 051 30223	22 kΩ 1/16W
R3K3	4822 051 30332	3.3 kΩ 1/16W
R3K4	4822 051 30332	3.3 kΩ 1/16W
R3K5	4822 051 30332	3.3 kΩ 1/16W
R3K6	4822 051 30332	3.3 kΩ 1/16W
R3K7	4822 051 30332	3.3 kΩ 1/16W
R3K8	4822 051 30332	3.3 kΩ 1/16W
R3K9	4822 051 30332	3.3 kΩ 1/16W
R3L0	4822 051 30332	3.3 kΩ 1/16W
R3L1	4822 051 30102	1 kΩ 1/16W
R3L2	4822 051 30102	1 kΩ 1/16W
R3L3	4822 051 30152	1.5 kΩ 1/16W
R3L4	4822 051 30152	1.5 kΩ 1/16W
R3L5	4822 051 30473	47 kΩ 1/16W
R3L6	4822 051 30473	47 kΩ 1/16W
R3L7	4822 051 30473	47 kΩ 1/16W
R3L8	4822 051 30473	47 kΩ 1/16W
R3L9	4822 051 30223	22 kΩ 1/16W
R3M0	4822 051 30223	22 kΩ 1/16W
R3M1	4822 051 30223	22 kΩ 1/16W
R3M2	4822 051 30223	22 kΩ 1/16W
R3M3	4822 051 30332	3.3 kΩ 1/16W
R3M4	4822 051 30332	3.3 kΩ 1/16W
R3M5	4822 051 30332	3.3 kΩ 1/16W
R3M6	4822 051 30152	1.5 kΩ 1/16W
R3M7	4822 051 30152	1.5 kΩ 1/16W
R3M8	4822 051 30102	1 kΩ 1/16W
R3M9	4822 051 30332	3.3 kΩ 1/16W
R3N0	4822 051 30332	3.3 kΩ 1/16W
R3N1	4822 051 30332	3.3 kΩ 1/16W
R3N2	4822 051 30332	3.3 kΩ 1/16W
R3N3	4822 051 30332	3.3 kΩ 1/16W
R3N5	4822 051 30471	470 Ω 1/16W
R3N6	4822 051 30471	470 Ω 1/16W
R3N7	4822 051 30471	470 Ω 1/16W
R3N8	4822 051 30471	470 Ω 1/16W
R3N9	4822 051 30102	1 kΩ 1/16W
R3P0	4822 051 30102	1 kΩ 1/16W
R3P1	4822 051 30681	680 Ω 1/16W
R3P2	4822 051 30682	6.8 kΩ 1/16W
R3P3	4822 051 30222	2.2 kΩ 1/16W
R3P4	4822 051 30331	330 Ω 1/16W
R3P5	4822 051 30151	150 Ω 1/16W
R3P6	4822 051 30339	33 Ω 1/16W
R3P8	4822 051 30332	3.3 kΩ 1/16W
R3P9	4822 051 30332	3.3 kΩ 1/16W
R3Q0	4822 051 30332	3.3 kΩ 1/16W
R3Q1	4822 051 30339	33 Ω 1/16W
R3Q2	4822 051 30339	33 Ω 1/16W
R3Q3	4822 051 30473	47 kΩ 1/16W
R3Q4	4822 051 30471	470 Ω 1/16W
R3Q5	4822 051 30222	2.2 kΩ 1/16W
R3Q6	4822 116 81008	4.7 Ω 1/10W
R3Q7	4822 051 30331	330 Ω 1/16W
R3Q8	4822 051 30152	1.5 kΩ 1/16W
R3Q9	4822 051 30103	10 kΩ 1/16W
R3R0	4822 051 30332	3.3 kΩ 1/16W
R3R1	4822 051 30682	6.8 kΩ 1/16W
R3R2	4822 051 30333	33 kΩ 1/16W
R3R3	4822 051 30221	220 Ω 1/16W
R3R6	4822 051 30152	1.5 kΩ 1/16W
R3R7	4822 051 30109	10 Ω 1/16W
R3R8	4822 051 30103	10 kΩ 1/16W
R3R9	4822 051 30102	1 kΩ 1/16W
R3S0	4822 051 30103	10 kΩ 1/16W
R3S4	4822 116 82487	0 Ω 1/16W

KEY BLOCK

C4D0	4822 124 41839	10 µF 6.3V
IR01	4822 130 82318	IR RECIVER 36 kHz
J4D0	4822 265 20504	2 Pin Jack
J4D1	4822 265 30657	33 Pin Jack
L4D0	4822 157 62723	100 µH
S4D0	4822 276 12455	TACT SWICH

VARIOUS

LP11 ⚠	4822 134 80175	LAMP FLE81U3096(TA)1P6
P1A1	4822 320 50204	FLEX CABLE
PL11	4822 130 90916	4INCH COLOR MULTI LCD4RE01
S101	4822 276 80399	KEYBOARD SWITCH
SP41	4822 240 30572	SPEAKER T050S01 2INCH

MECHANICAL PARTS

CABINET

001B	4822 432 60495	CASS CASE (K)
005B		B.H. TAP. SCREW
006B		B.H. TAP. SCREW
007B	4822 403 70153	STRAP BRACKET R
008B	4822 403 70154	STRAP BRACKET L
009B		B.H. TAP. SCREW
010B	4822 498 30177	HANDLE
011B	4822 432 60489	UPPER CASE K
015B	4822 443 63169	CASSETTE LID(K)
018B		B.H.M. SCREW
020B		SHIELD A
021B		SHIELD B
001D	4822 432 60488	TV BOTTOM CASE(K)
009D	4822 432 60481	HINGE COVER
010D	4822 432 60484	TV UPPER CASE
011D	4822 464 90692	FRAME TV FRAME (K)
012D	4822 502 13203	B.H. TAP. SCREW
013D	4822 450 61631	TV WINDOW
015D	4822 413 31638	KNOB (VOLUME)
016D	4822 413 31639	KNOB (CONTRAST)
017D	4822 502 12537	P.H.M. SCREW
018D	4822 466 92948	TV BUFFER
019D	4822 380 20383	REFLECTOR
020D	4822 502 13639	B.H. TAP. SCREW
021D	4822 502 13203	B.H. TAP. SCREW
022D	4822 502 13203	B.H. TAP. SCREW
023D	4822 502 13203	B.H. TAP. SCREW
024D	4822 502 13203	B.H. TAP. SCREW
030D	4822 466 70685	DIFFUSER
031D	4822 466 10587	MASK
032D		SHEET SP
033D	4822 492 70762	SPRING
034D		STICKER
035D	4822 256 91725	SPEAKER HOLDER
036D	4822 502 13203	B.H. TAP. SCREW
040D		SHEET
041D		SHEET
042D		SHEET
001F	4822 464 90691	FRAME K
006F	4822 502 13103	B.H. TAP. SCREW
007F	4822 432 60493	BATTERY LID(K)
011F	4822 502 13103	B.H. TAP. SCREW
012F		B.H. TAP. SCREW
013F		B.H. TAP. SCREW
014F	4822 502 13681	F.H. TAP. SCREW
015F	4822 432 60482	BOTTOM CASE
018F	4822 256 91729	ACCESSORY CONNECTOR HOLDER
019F	4822 450 61632	REMOCON WINDOW
020F	4822 502 13103	B.H. TAP. SCREW
021F		TERMINAL HOLDER (K)
024F	4822 256 91724	CASE LITHIUM CASE(K)
028F		LITHIUM LID
033F	4822 411 61731	SLIDE SW KNOB
041F	4822 403 70152	HINGE BRACKET
042F	4822 417 11118	HINGE UNIT
043F	4822 403 70143	HINGE ARM
044F	4822 502 12902	B.H.M. SCREW
045F		B.H. TAP. SCREW
046F	4822 502 13103	B.H. TAP. SCREW
050F	4822 502 13103	B.H. TAP. SCREW
051F	4822 502 13103	B.H. TAP. SCREW
052F	4822 432 60492	ANTENNA LID
053F	4822 303 30394	ANTENNA
054F		B.H. TAP. SCREW
055F	4822 502 13392	B.H. TAP. SCREW
057F	4822 502 13103	B.H. TAP. SCREW
058F		B.H. TAP. SCREW
060F	4822 432 60486	HA CASE A
061F	4822 432 60487	HA CASE B
062F	4822 502 13679	B.H. TAP. SCREW
063F	4822 325 20217	INSULATOR
064F	4822 466 92945	BUFFER
065F		TERMINAL
067F		B.H. TAP. SCREW
068F		CLAMPER:HA
071F		INSULATOR
072F		INSULATOR
075F		CASS CASE BRACKET
076F		B.H. TAP. SCREW
077F		SHEET
001R		LABEL

TAPE DECK CHASSIS

100N	4822 403 53125	CASSETTE GUIDE(L)
101N	4822 522 32901	MAIN ARM GEAR(A)
102N	4822 403 53124	CASETTE GUIDE(R)
103N	4822 691 30203	CASSETTE HOLDER UNIT
104N	4822 403 70025	DAMPER UNIT
105N	4822 403 70024	LOCK LEVER UNIT
107N	4822 403 70019	STAND (R) UNIT
109N	4822 492 41282	HOLDER SPRING (L)
110N	4822 492 32705	HOLDER SPRING(R)
112N	4822 278 10083	LEAF SW
113N	4822 464 50652	LEAF SW COVER(Q)
114N	4822 492 41283	LOCK BORD SPRING
115N	4822 402 61181	STAND (L)UNIT
116N	4822 492 42138	LOCK LEVER (B) SPRING
117N	4822 403 52368	LOCK LEVER(B)
118N	4822 528 81154	LOCK ROLLER(O)
119N	4822 402 61187	LOCK BOARD UNIT
120N	4822 492 41284	LOCK LEVER(A) SPRING
121N	4822 403 52367	LOCK LEVER(A)
122N	4822 403 70022	CASSETTE UP(O) UNIT
123N	4822 528 81037	SUPPLY REEL TABLE
124N	4822 528 20613	SUPPLY CLUTCH UNIT
125N	4822 528 20614	TAKE UP CLUTCH UNIT
126N	4822 528 10698	TAKE UP REEL TABLE
128N	4822 111 91971	DEW DETECTOR UNIT
129N	4822 404 60222	CASSETTE OPENER
135N	4822 466 40236	SOFT BRAKE(T) UNIT
136N	4822 522 32439	DRIVE GEAR ARM UNIT
137N	4822 502 13057	CYLINDER UNIT SCREW
138N	4822 691 20457	UPPER CYLINDER UNIT
139N	4822 290 60713	RT TERMINAL
140N	4822 691 20592	CYLINDER UNIT
141N	4822 358 30832	LOADING BELT
142N	4822 528 81151	INTERMEDIATE PULLY GEAR
143N	4822 532 51556	CUT WASHER
144N	4822 522 32294	DRIVE GEAR(B)
145N	4822 466 82337	EARTH HOLDER UNIT
147N	4822 522 32293	DRIVE GEAR(A)
148N	4822 522 31913	CAM GEAR
149N	4822 532 11223	THRUST WASHER
150N	4822 466 82336	MAIN ROD(K) UNIT

151N	4822 522 31918	LOADING GEAR(C) (2)
152N	4822 492 70768	LOADING GEAR(C) SPRING
153N	4822 522 31917	LOADING GEAR (C)(1)
154N	4822 466 82335	GUARD PLATE
155N	4822 403 52388	DRIVE ARMKICK LEVER
156N	4822 492 41294	DRARMKICK LEVER SPRING
157N	4822 522 31921	SECTOR GEAR UNIT
158N	4822 464 50404	SEAFTY TAB SW BASE
159N	4822 271 30423	SAFTY TAB SW
160N	4822 522 32956	DRIVE GEAR(C)
161N	4822 278 90565	MODE SELECT SW
163N	4822 466 61663	STATOR UNIT
164N	4822 528 81036	ROTOR UNIT
165N	4822 528 81215	MAIN PULLEY UNIT
166N	4822 358 20241	CAPSTAN BELT
167N	4822 432 60233	BELTCOVER
200N	4822 502 12847	P2 ADJUST SCREW
201N	4822 403 52379	P2 ADJUST PLATE
202N	4822 464 50413	SUPPLY POST STOPPER
203N	4822 402 61179	V STOPPER BASE
204N	4822 535 93159	SUPPLY ROLLER POST UNIT
205N	4822 462 40808	P2 CAP
206N	4822 403 52386	TAPE PROTECTOR
207N	4822 464 50416	SUP SHAF THOLDER(1)UNIT
208N	4822 403 52392	SUP SHAFT HOLDER ANGLE
209N	4822 404 60204	CONNECTION ROD
210N	4822 532 11662	RING GUIDE SLEEVE UNIT
211N	4822 403 52391	CONECTION TIE UNIT
212N	4822 492 41292	LOADING SPRING
213N	4822 522 31926	LOADING RING(S)(1)UNIT
214N	4822 528 70529	RING GUIDE ROLLER
215N	4822 492 41292	LOADING SPRING
216N	4822 522 32779	LOADING RING(T)(1)UNIT
217N	4822 492 63993	PRESSER SPRING
218N	4822 532 11661	RING GUIDE SLEEVE
219N	4822 403 53457	LOADING GUIDE (S)(1)
220N	4822 402 61176	LOADING GUIDE(S)(2)
221N	4822 530 70449	SUPPLY UPPER LIMITER
222N	4822 325 60299	P1 POST SLEEVE(B)
223N	4822 532 11975	P1 COLLAR
224N	4822 532 21384	P1 ROLLER
225N	4822 404 60203	P1 LIMITER PLATE
226N	4822 502 13062	SCREW
227N	4822 402 61183	P1 BASE (1)UNIT
228N	4822 520 20395	THRUST SPACER
229N	4822 502 12017	TURUST SCREW NUT
230N	4822 502 13059	ROLLER POST SCREW
231N	4822 462 40812	DUST SEAL
232N	4822 466 92222	CAPSTAN HOUSING UNIT
233N	4822 528 90782	ROLLER POST UNIT
234N	4822 404 60202	T-UP SHAFT HOLDER ANGLE
235N	4822 402 61184	TAKEUP SHAFT HOLDER(A)
236N	4822 402 61178	TAKE UP LOADING BASE
237N	4822 492 42257	SHAFT HOLDPRESS SPRING
238N	4822 466 82334	SHAFT HOLD PLATE ANGLE
239N	4822 130 32878	LED
240N	4822 502 13058	T-UP SHAFT ADJ. SCREW
242N	4822 361 21106	LOADING MOTOR UNIT
245N	4822 492 32843	TENSION SPRING
246N	4822 464 50421	TENSION ARM UNIT
247N	4822 321 30349	TENSION BAND UNIT
248N	4822 404 60418	BAND RELEASE ARM
249N	4822 464 50419	TENSION KICK LEVER
250N	4822 404 60417	EJECT LEVER (A)
251N	4822 404 60422	SUPPORTER UNIT
252N	4822 492 32702	BRAKE SPRING
253N	4822 466 40185	BLAKE(R)UNIT
254N	4822 466 40184	BLAKE(L)UNIT
255N	4822 466 81684	BLAKE PLATE(1)UNIT
256N	4822 404 60421	EJECT LEVER
257N	4822 691 20584	A/C HEAD UNIT
258N	4822 502 12846	A/C HEAD ADJ. SCREW
259N	4822 492 41297	A/C HEAD ADJ. SPRING
260N	4822 502 13085	A/C TILT ADJ.SCREW
261N	4822 403 53464	A/C HEAD ARM UNIT
262N	4822 403 70017	A/C HEAD BINDER
263N	4822 505 10931	A/CHEAD ARM NUT
264N	4822 492 41296	A/C HEAD SPRING
265N	4822 522 31923	LOADING GEAR(A)
266N	4822 522 32442	LOADING GEAR (B)
267N	4822 505 10929	ADJUST NUT
268N	4822 505 10776	M2 NYLON NUT
269N	4822 535 70855	P4 POST SLEEVE
270N	4822 535 71217	P5 POST SLEEVE
271N	4822 492 41298	P4,P5 POST SPRING
272N	4822 404 60419	PINCH LEVER
273N	4822 492 70598	PINCH LEVER SPRING
274N	4822 528 70522	PINCH ROLLER ARM(1)UNIT
275N	4822 528 70534	PINCH ARM UNIT
276N	4822 492 41302	PINCH ARM SPRING
277N	4822 403 10238	SOFT BLAKELEVER(S)UNIT
278N	4822 492 41289	SOFT BLAKE SPRING(S)
279N	4822 492 32845	REW ARM SPRING
280N	4822 404 60423	FF/REW ARM UNIT
282N	4822 249 40273	FE HEAD
283N	4822 466 92225	FE HEAD BASE
284N	4822 492 32703	SUPPORTER SPRING
285N	4822 403 53835	SLIDE BASE (0) UNIT
286N	4822 492 70325	SLIDE SPRING
287N	4822 403 53834	IMPEDANCE LEVER
288N	4822 505 11049	PUSH NUT
289N	4822 492 70597	IMPEDANCE DRIVE SPRING
290N	4822 403 70033	IMPEDANCE ARM(1)UNIT
291N	4822 528 81384	IMPEDANCE ROLLER
292N	4822 530 70449	SUPPLY UPPER LIMITER
294N	4822 403 70032	SUPPLY SHAFTHOLDERUNIT
400N		MECHA CHASSIS
401N		WASHER
402N		WASHER
403N		SCREW
404N		SCREW
405N		SCREW
406N		SCREW
407N		SCREW
408N		SCREW
409N		WASHER
410N		WASHER
411N		SCREW
412N		SCREW
413N		SCREW
414N		SCREW
415N		WASHER
416N		SCREW
417N		WASHER
418N		WASHER
419N		SCREW
420N		SCREW
421N		SCREW

422N		WASHER
423N		SCREW
424N		WASHER
425N		SCREW
426N		SCREW
427N		SCREW
428N		MECHANISM CONNECTION PCB
429N		SUPPLY PHOTO PCB
430N		TAKE UP PHOTO PCB

MISCELLANEOUS

001S		PACKING CASE
002S		CUSHION
003S		CUSHION
001T		POLYETHY BAG
002T	4822 736 52289	USER MANUAL
001Z	4822 138 10425	LITHIUM BATTERY